PRACTICAL TRAINING

JUNE 2022 - NOVEMBER 2022

PORT FOLIO

SATHYABAMA INSTITUTE
OF SCIENCE AND TECHNOLOGY
DOREEN GRACE SANTHOSH

ARUN & ASSOCIATES
1289, TRICHY ROAD, COIMBATORE-640018.

SATHYABAMA

INSTITUTE OF SCIENCE AND TECHNOLOGY
(DEEMED TO BE UNIVERSITY)
Accredited with "A" grade by NAAC I 12B Status by UGC I Approved by AICTE
Jeppiaar Nagar, Rajiv Gandhi Salai, Chennai – 600 119
www.sathyabama.ac.in

SCHOOL OF BUILDING AND ENVIRONMENT
DEPARTMENT OF ARCHITECTURE
PRACTICAL TRAINING PORTFOLIO (SAR4063)
DEC 2022

Name of the Student : DOREEN GRACE SANTHOSH

Reg No. : 39210021

Batch : **2019 - 2024**

Semester : **VII**

SATHYABAMA

INSTITUTE OF SCIENCE AND TECHNOLOGY
(DEEMED TO BE UNIVERSITY)
Accredited with "A" grade by NAAC I 12B Status by UGC I Approved by AICTE
Jeppiaar Nagar, Rajiv Gandhi Salai, Chennai – 600 119
www.sathyabama.ac.in

SCHOOL OF BUILDING AND ENVIRONMENT

DEPARTMENT OF ARCHITECTURE

VIVA-VOCE EXAMINATION

This is to certify that the practical training SAR 4063 is the work of **DOREEN GRACE SANTHOSH** who had undergone training in **ARUN AND ASSOCIATES** and has been monitored by the continuous assessment during JUNE 2022 to NOVEMBER 2022.

Dr.Devyani Gangopadhyay
DEAN

Submitted for Viva voce Examination held on 13-12-2022

Internal Examiner

External Examiner

SATHYABAMA

INSTITUTE OF SCIENCE AND TECHNOLOGY
(DEEMED TO BE UNIVERSITY)
Accredited with "A" grade by NAAC I 12B Status by UGC I Approved by AICTE
Jeppiaar Nagar, Rajiv Gandhi Salai, Chennai – 600 119
www.sathyabama.ac.in

DECLARATION

I, **DOREEN GRACE SANTHOSH,** hereby declaring that the Training Report **JUNE 2022 to NOVEMBER 2022** done by me under the guidance of **Ar.ARUN PRASAD PRAKASHAN** is submitted in partial fulfillment of the requirements for the completion of a practical training session.

DATE : 13-12-2022
PLACE : CHENNAI

SIGNATURE OF CANDIDATE

ACKNOWLEDGEMENT

I am pleased to acknowledge my sincere thanks to the Board **of Management of SATHYABAMA** for their kind encouragement in doing this practical training and for completing it successfully. I am grateful to them.

I convey my thanks to **Dr. Devyani Gangopadhyay,** Dean, School of Building and Environment and **Ar.Sarath Chandra Kanth,** Design Chair, Department of Architecture for having been a constant source of support and encouragement.

I wish to express my thanks to all Teaching and Non-teaching staff members of the Department who were helpful in many ways for the completion of the project.

I also wish to thank **Ar.ARUN PRASAD PRAKASHAN,** for the experience of interning at their firm

CONFIRMATION LETTER

Arun & Associates <arunandassociates@gmail.com>
to me

Mon, Jun 13, 4:30 PM

Hello Doreen,

Good Day!!

We are pleased to inform you that you have been selected for the internship programme with our firm for the month of June 2022 to December 2022.
Kindly send us your confirmation e-mail with the bonafide certificate from your college for the same. Also mention the joining date of your internship.

Thanks & Regards
A.Pradhiksha
Architect
Arun & Associates
1289,Trichy Road,
Coimbatore-641018
0422-2301387,4394223
http://arunandassociates.in/

...

JOINING LETTER

ARUN & ASSOCIATES

ARCHITECTURE.ENGINEERING.PLANNING

Ref.No: A&A / HR / JL / 042 / 06 / 2022

June 24, 2022

To

The Head of the Department
Sathyabama Institute of Science and Technology,
Chennai

Sir,

This is to confirm that **DOREEN GRACE SANTHOSH** Register No: **39210021** doing 7th semester in Bachelors of Architecture, Sathyabama Institute of Science and Technology, has joined our firm for her practical training from 15 June 2022.

Thanking You,

For Arun & Associates,

(ARUN PRASAD.P., B.Arch, M.Plan)
Principal Architect Planner

ARUN PRASAD.P .B.Arch.,M.Plan.,
Registered Architect
Reg No: CA/98/22599
ARUN & ASSOCIATES
Architects & Planners
1289,Trichy Road,Coimbatore - 641 018

1289, TRICHY ROAD, COIMBATORE-641 018. TAMIL NADU,INDIA
PH- +91 422 2301387, +91 422 4394223 WEB- WWW.ARUNANDASSOCIATES.IN
EMAIL- INFO@ARUNANDASSOCIATES.IN ; ADMIN@ARUNANDASSOCIATES.IN

MONTHLY REPORT

SATHYABAMA
INSTITUTE OF SCIENCE AND TECHNOLOGY
(DEEMED TO BE UNIVERSITY)
Accredited "A" Grade by NAAC | 12B Status by UGC | Approved by AICTE
www.sathyabama.ac.in

DEPARTMENT OF ARCHITECTURE

PROFESSIONAL PRACTICAL TRAINING REPORT 2022

(Continuous progress report of the trainee architect for the period of One month in the office to submitted to HOD by the Trainee in Charge of the Organization)

1. Name of the office / organization : ARUN AND ASSOCIATES
2. Address & Contact Number : 1289, TRICHY ROAD, COIMBATORE -018
3. Name of the student : DOREEN GRACE SANTHOSH
4. Duration : From 15/06/22 To 21/07/22
5. Total No. of days : 32 WORKING DAY - (2DAYS LEAVE) - 30 WORKING DAYS
6. Evaluation of Performance criteria shall be on

* **Note:** Kindly grade the student as per his/her overall performance in the office during the assessment month which will be converted to the allotted 90 marks by the department.

Description of works	Excellent	Good	Fair	Poor	NA
Understanding of office culture		✓			
Participation in the office		✓			
Reading of drawings		✓			
Presentation Techniques		✓			
Model making works	—	NIL	—		
Understanding of construction details		✓			
Drafting Skills (~~Manual~~ / Computer)		✓			
Site Supervision / Discussion with clients	—	NIL	—		
Adherence to Time schedule		✓			
Other computer skills		✓			
File and Office Maintenance	—	NIL	—		
Coordination with other consultants	—	NIL	—		
Overall Grading*	B				

(A – 9.0, B – 8.0, C – 7.0, D – 6.0, E – 5.0)

SATHYABAMA
INSTITUTE OF SCIENCE AND TECHNOLOGY
(DEEMED TO BE UNIVERSITY)
Accredited "A" Grade by NAAC | 12B Status by UGC | Approved by AICTE
www.sathyabama.ac.in

7. Any other Remarks : —

8. Signature of the: Head of the Office / Organization (With Seal)

ARUN PRASAD.P ,B.Arch.,M.Plan.,
Registered Architect
Reg No: CA/98/22599
ARUN & ASSOCIATES
Architects & Planners
1289,Trichy Road,Coimbatore - 641 018

SATHYABAMA

INSTITUTE OF SCIENCE AND TECHNOLOGY
(DEEMED TO BE UNIVERSITY)
Accredited "A" Grade by NAAC | 12B Status by UGC | Approved by AICTE
www.sathyabama.ac.in

DEPARTMENT OF ARCHITECTURE

PROFESSIONAL PRACTICAL TRAINING REPORT 2022

(Continuous progress report of the trainee architect for the period of One month in the office to submitted to HOD by the Trainee in Charge of the Organization)

1. Name of the office / organization : ARUN AND ASSOCIATES
2. Address & Contact Number : 1289, TRICHY ROAD, COIMBATORE- 641 018. PH- 422 2301387, 4394223.
3. Name of the student : DOREEN GRACE SANTHOSH
4. Duration : From 08 AUGUST 2022 To 31 AUGUST 2022
5. Total No. of days : 20 WORKING DAYS
6. Evaluation of Performance criteria shall be on

* **Note:** Kindly grade the student as per his/her overall performance in the office during the assessment month which will be converted to the allotted 90 marks by the department.

Description of works	Excellent	Good	Fair	Poor	NA
Understanding of office culture		✓			
Participation in the office		✓			
Reading of drawings		✓			
Presentation Techniques		✓			
Model making works	—	NIL	—		
Understanding of construction details		✓			
Drafting Skills (Manual / Computer)		✓			
Site Supervision / Discussion with clients	—	NIL	—		
Adherence to Time schedule		✓			
Other computer skills		✓			
File and Office Maintenance	—	NIL	—		
Coordination with other consultants	—	NIL	—		
Overall Grading*	B				

(A – 9.0, B – 8.0, C – 7.0, D – 6.0, E – 5.0)

SATHYABAMA
INSTITUTE OF SCIENCE AND TECHNOLOGY
(DEEMED TO BE UNIVERSITY)
Accredited "A" Grade by NAAC | 12B Status by UGC | Approved by AICTE
www.sathyabama.ac.in

7. Any other Remarks : —

8. Signature of the: Head of the Office / Organization (With Seal)

ARUN PRASAD.P ,B.Arch.,M.Plan.,
Registered Architect
Reg No: CA/98/22599
ARUN & ASSOCIATES
Architects & Planners
1289,Trichy Road,Coimbatore - 641 018

SATHYABAMA

INSTITUTE OF SCIENCE AND TECHNOLOGY
(DEEMED TO BE UNIVERSITY)
Accredited "A" Grade by NAAC | 12B Status by UGC | Approved by AICTE
www.sathyabama.ac.in

DEPARTMENT OF ARCHITECTURE

PROFESSIONAL PRACTICAL TRAINING REPORT 2022

(Continuous progress report of the trainee architect for the period of One month in the office to submitted to HOD by the Trainee in Charge of the Organization)

1. **Name of the office / organization** : ARUN AND ASSOCIATES
2. **Address & Contact Number** : 1289, TRICHY ROAD, COIMBATORE - 641 018 (91 422 2301387)
3. **Name of the student** : DOREEN GRACE SANTHOSH
4. **Duration** : From 22/07/22 To 30/07/22
5. **Total No. of days** : 08 WORKING DAYS - (1 DAY LEAVE) - 07 WORKING DAYS
6. **Evaluation of Performance criteria shall be on**

* **Note:** Kindly grade the student as per his/her overall performance in the office during the assessment month which will be converted to the allotted 90 marks by the department.

Description of works	Excellent	Good	Fair	Poor	NA
Understanding of office culture		✓			
Participation in the office		✓			
Reading of drawings		✓			
Presentation Techniques		✓			
Model making works		—	NIL	—	
Understanding of construction details		✓			
Drafting Skills (~~Manual~~ / Computer)		✓			
Site Supervision / Discussion with clients		—	NIL	—	
Adherence to Time schedule		✓			
Other computer skills		✓			
File and Office Maintenance		—	NIL	—	
Coordination with other consultants		—	NIL	—	
Overall Grading*	B				

(A – 9.0, B – 8.0, C – 7.0, D – 6.0, E – 5.0)

SATHYABAMA
INSTITUTE OF SCIENCE AND TECHNOLOGY
(DEEMED TO BE UNIVERSITY)
Accredited "A" Grade by NAAC | 12B Status by UGC | Approved by AICTE
www.sathyabama.ac.in

7. **Any other Remarks** : —

8. **Signature of the: Head of the Office / Organization (With Seal)**

ARUN PRASAD.P ,B.Arch.,M.Plan.,
Registered Architect
Reg No: CA/93/22599
ARUN & ASSOCIATES
Architects & Planners
1289,Trichy Road,Coimbatore - 641 018

CONSOLIDATED CERTIFICATE

ARUN & ASSOCIATES

ARCHITECTURE.ENGINEERING.PLANNING

Ref.No: A&A / HR / CC / 52 / 11 / 2022

19 November, 2022

To

The Head of the Department
Sathyabama Institute of Science and Technology
Chennai

Sir,

This is to confirm that **DOREEN GRACE SANTHOSH** Register No: **39210021** doing **7th Semester** in Bachelors of Architecture, at Sathyabama Institute of Science and Technology has worked as a trainee at our firm. She had completed her training from 15 June 2022 to 19 November 2022.

Over this period, she has shown a continuing interest in learning and adapting to practical challenges of the design work sphere. She was a sincere and hardworking student. She had showed keen interest in understanding the details and had improvised her skills over the months at the office. She had completed work that was allotted and outputs have been delivered to our satisfaction.

On behalf of our office, I take this opportunity to wish **DOREEN GRACE SANTHOSH** all the best for her future prospects.

Thanking You,

For Arun & Associates,

(ARUN PRASAD.P., B.Arch, M.Plan)
Principal Architect Planner

ARUN PRASAD.P ,B.Arch.,M.Plan.,
Registered Architect
Reg No: CA/98/22599
ARUN & ASSOCIATES
Architects & Planners
1289 Trichy Road,Coimbatore - 641 01

1289, TRICHY ROAD, COIMBATORE-641 018. TAMIL NADU,INDIA
PH- +91 422 2301387, +91 422 4394223 WEB- WWW.ARUNANDASSOCIATES.IN
EMAIL- INFO@ARUNANDASSOCIATES.IN ; ADMIN@ARUNANDASSOCIATES.IN

CRITICAL OVERVIEW:

My time at ARUN AND ASSOCIATES was wonderful and really productive. Being a part of their firm and working with their team was a privilege for me. I have discovered a lot of new knowledge through this internship opportunity. I got to understand the project's practical knowledge, the firm's management, and how activities are coordinated amongst several divisions. I had the opportunity to learn many new CAD skills by working with other professionals. Additionally, I developed different perspectives on design while working on various projects.

PRACTICAL TRAINING

JUNE 2022 - NOVEMBER 2022

ABOUT THE FIRM

Arun and Associates, a well known frim in Coimbatore, was founded in 1998 by architect Arun Prasad Prakashan. Architect Arun Prasad Prakashan did his Bachelors in Architecture and Masters in planning.The firm is located in 1289, Trichy Rd, Nadar Colony, Ramanathapuram, Tamil Nadu 641018. Commercial, Residential, Hospital and Industrial projects are done here. They have recieved various recognitons for the works that have been done.

The firm has Architects, structural engineers, quantity surveyors and building estimators, site engineers and administrators. Overall there are about 35 staff who work in the firm.

NAME : DOREEN GRACE SANTHOSH

REG NO : 39210021

ARUN & ASSOCIATES

1289,TRICHY ROAD,COIMBATORE-640018.

PRACTICAL TRAINING

JUNE 2022 - NOVEMBER 2022

TABLE OF CONTENTS

1. MASONIC CHILDREN'S HOSPITAL - HOSPITAL
2. MR. MANOGAR - RESIDENCE
3. MR. B.P. SHIVA RAM - RESIDENCE
4. MR. GURU PRASAD - RESIDENCE
5. MRS. KALAISELVI ARULKUMAR - RESIDENCE
6. DR. V.A. RAGHUPATHI - RESIDENCE
7. MRS. VIJAYALAKSHMI -RESIDENCE
8. MRS. AISHWARYA SOUNDARAJAN - RECREATION SPACE, CAR PORTICO AND GAZEBO
9. MR. ELANGOVAN - RESIDENCE
10. MR. DHALAPATHI - RESIDENCE
11. SITE VISIT DOCUMENTATION
    (a) BRINDA HOUSE
    (b) MRS. VIJAYALAKSHMI
12. 3 D MODEL - FACTORY
    (a) SAGS APPARELS

NAME : DOREEN GRACE SANTHOSH

REG NO : 39210021

ARUN & ASSOCIATES

1289,TRICHY ROAD,COIMBATORE-640018.

PRACTICAL TRAINING

JUNE 2022 - NOVEMBER 2022

MASONIC CHILDREN'S HOSPITAL

HOSPITAL AT COIMBATORE

NAME : DOREEN GRACE SANTHOSH

REG NO : 39210021

ARUN & ASSOCIATES

1289, TRICHY ROAD, COIMBATORE-640018.

This drawing is the property of ARUN AND ASSOCIATES (A&A) and shall not be passed on to any person not authorised by A&A to recieve it. It shall not be copied or modified in full or part without A&A's prior permission. The details furnished in this drawing are for this PROJECT only.

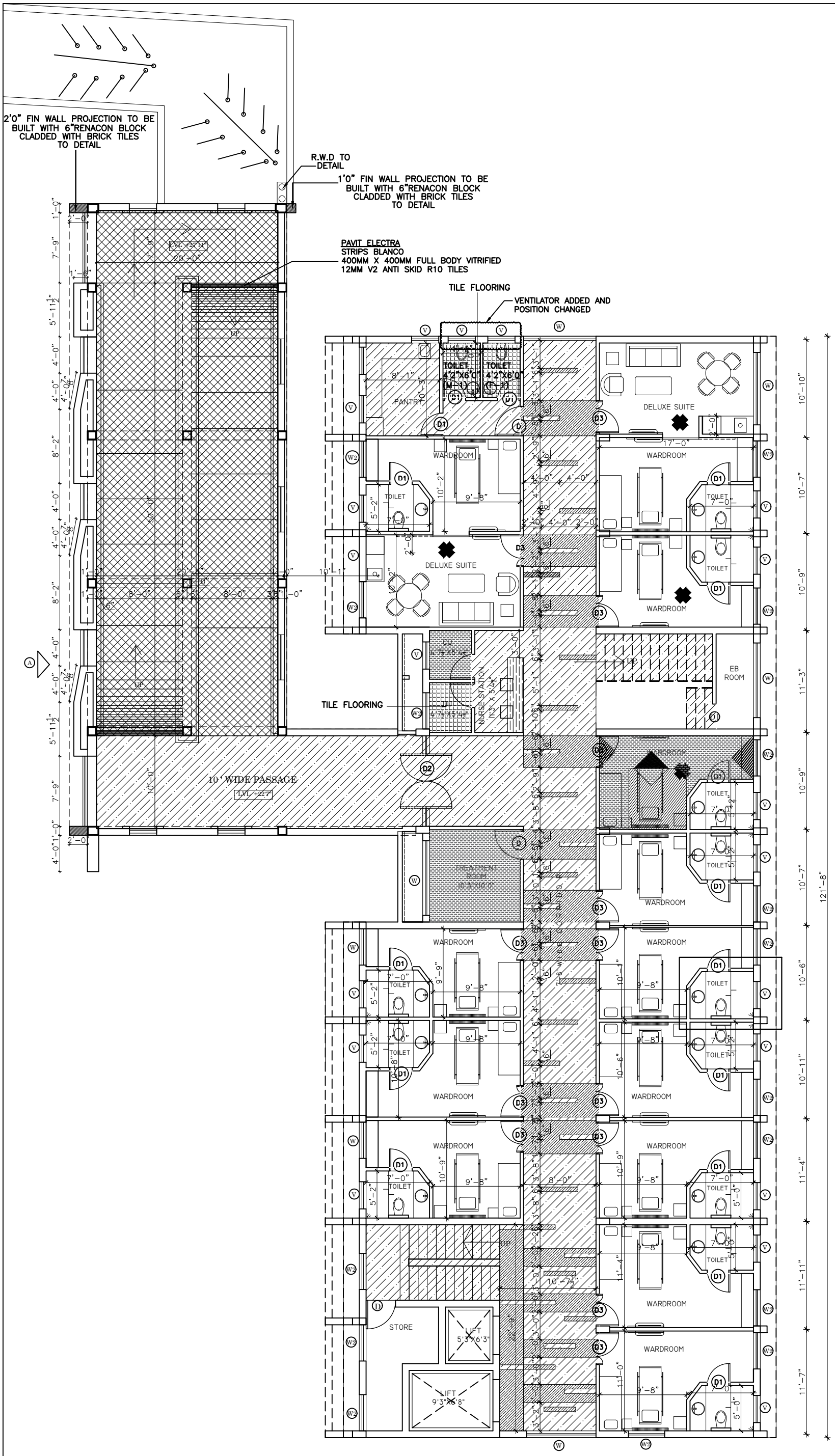

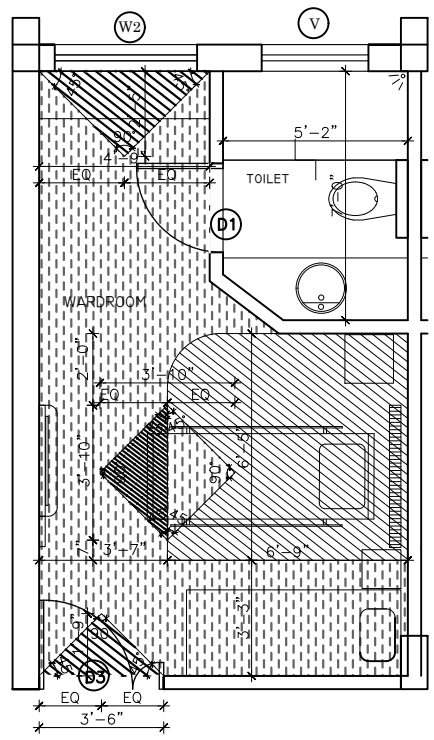

WARDROOM (1:2)

TARKETT VINYL FLOORING – 21020972
LIGHT–BEIGE – 75 SQ.FT

TARKETT VINYL FLOORING – 21020973
MEDIUM–WARM BEIGE – 45 SQ.FT

TARKETT VINYL FLOORING – 21020732
YELLOW – 20 SQ.FT

TARKETT VINYL FLOORING – 21020979
MEDIUM–BLUE – 5 SQ.FT

KALINGA QUARTZ – BERMINGHAM STONE TO BE USED FOR NURSE STATION TABLE TOPS

GRANITE TO BE SOURCED FROM S.S MARBLES

KALINGA QUARTZ – BERMINGHAM STONE

VINYL FLOORING

GRANITE FLOORING – DARK GRANITE
DARK MINT PEARL

GRANITE FLOORING – LIGHT GRANITE
SPARKLE BROWN

ROOMS THAT REQUIRE AC

WALKING BRIDGE AREA :1620 SQ.FT
RAMP AREA :1723 SQ.FT
TOTAL RAMP AREA :5150 SQ.FT

CLIENT:
MASONIC CHILDREN'S HOSPITAL

PROJECT NAME:
HOSPITAL AT COIMBATORE

DRAWING TITLE:
TYPICAL FLOOR PLAN – FLOORING LAYOUT

DATE	DWG NO.	DRAWN BY
25.10.22	A2:01	DOREEN S.
SCALE	PROJ CODE	CHECKED BY
1"=10'0"	COM–202–2020	ARUN P.

ARUN AND ASSOCIATES
ARCHITECTS & PLANNERS
1289, TRICHY ROAD,
COIMBATORE – 641 018.

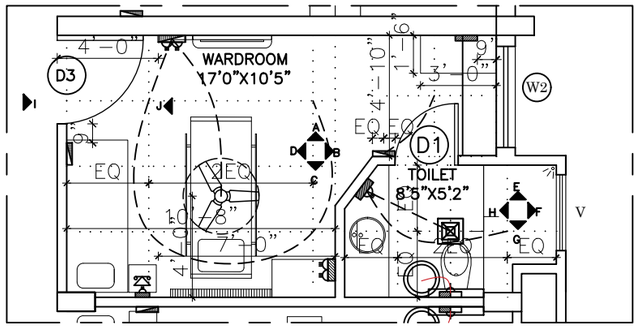

PART PLAN–A CLASS ROOM

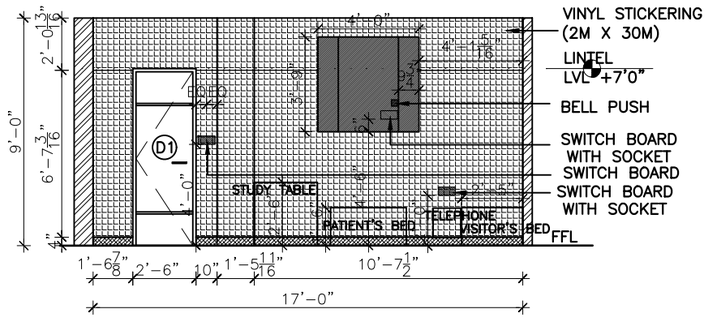

ELEVATION–C

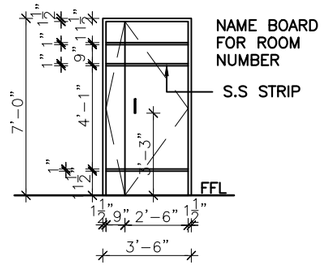

D3–DOOR
ELEVATION J

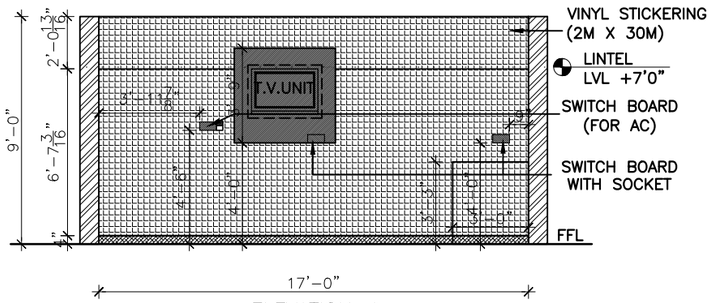

ELEVATION–A

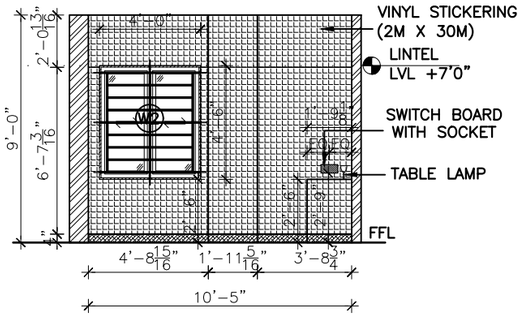

ELEVATION–B

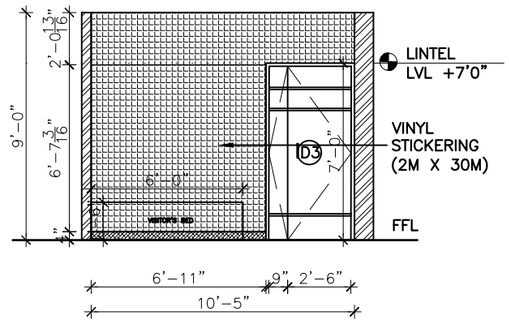

ELEVATION–D

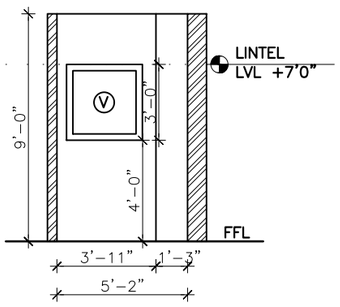

ELEVATION–F

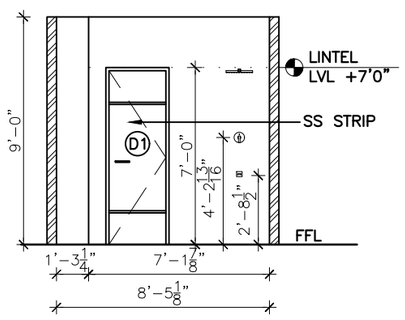

ELEVATION–E

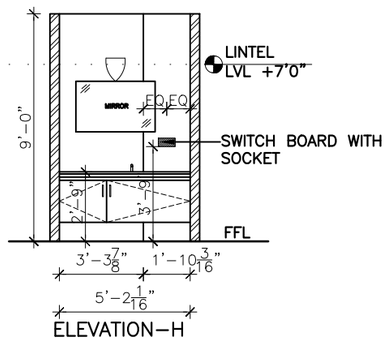

ELEVATION–H

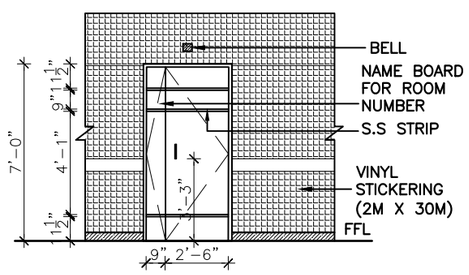

D3–DOOR
ELEVATION I

This drawing is the property of ARUN AND ASSOCIATES (A&A) and shall not be passed on to any person not authorised by A&A to recieve it. It shall not be copied or modified in full or part without A&A's prior permission. The details furnished in this drawing are for this PROJECT only.

CLIENT:
MASONIC CHILDREN'S HOSPITAL

PROJECT NAME:
HOSPITAL AT COIMBATORE

DRAWING TITLE:
FURNITURE LAYOUT
FOR B–BLOCK

DATE	DWG NO.	DRAWN BY
05.08.22	A2:01	DOREEN S.
SCALE	PROJ CODE	CHECKED BY
1"=6'0"	COM–202–2020	ARUN P.

ARUN AND ASSOCIATES
ARCHITECTS & PLANNERS
1289, TRICHY ROAD,
COIMBATORE – 641 018.

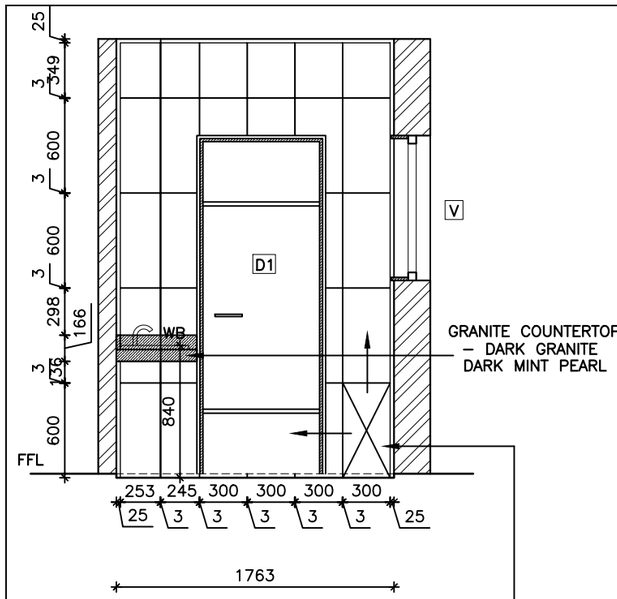

ELEVATION A

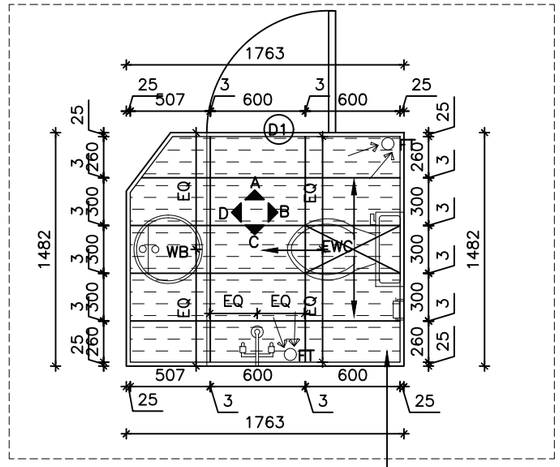

PART PLAN – SECOND FLOOR TOILET

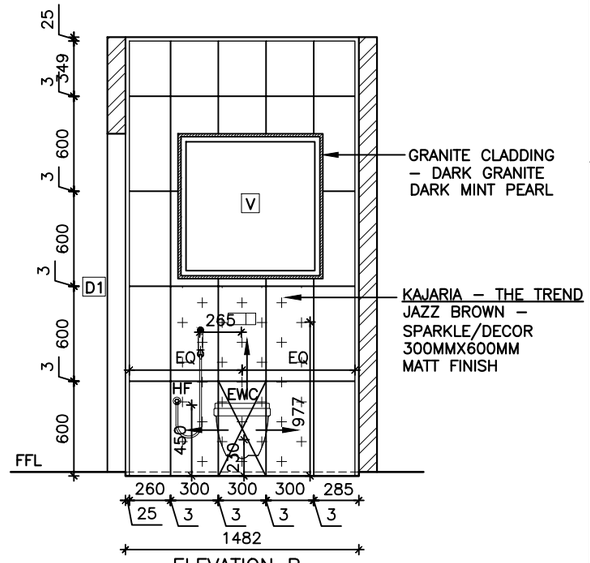

ELEVATION B

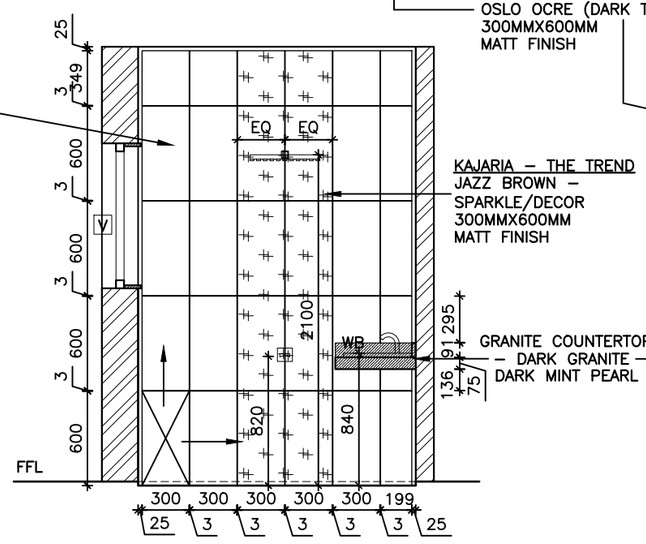

ELEVATION C

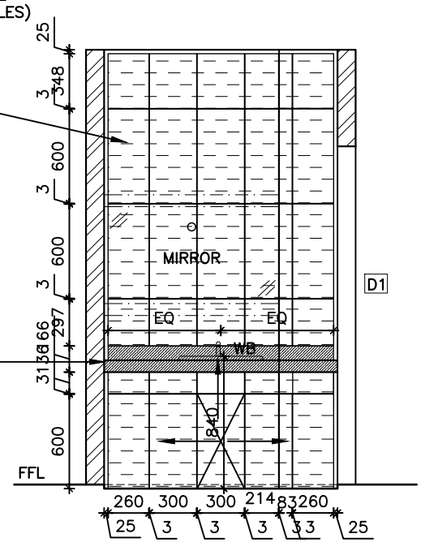

ELEVATION D

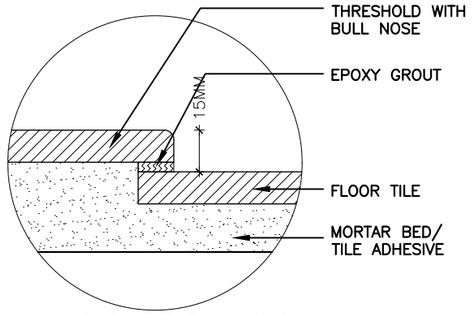

THRESHOLD TILE JUNCTION
(DETAIL–A)

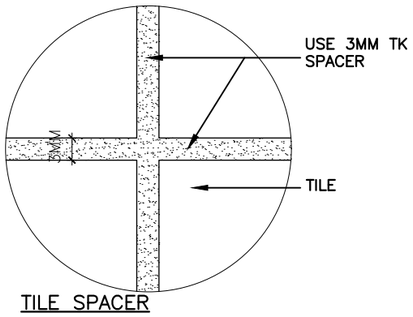

TILE SPACER
(DETAIL–B)

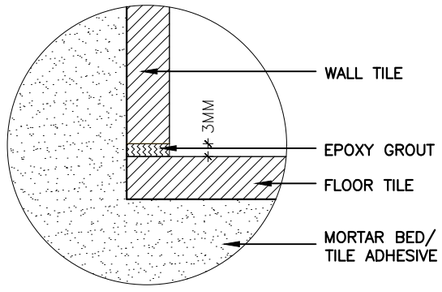

FLOOR AND WALL
TILE JUNCTION

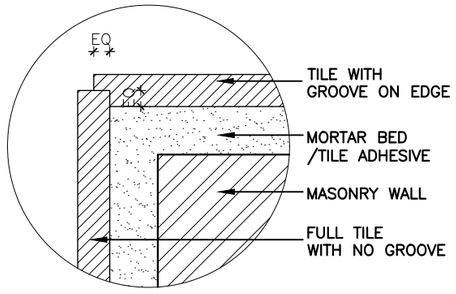

TILE 90° JUNCTION

This drawing is the property of ARUN AND ASSOCIATES (A&A) and shall not be passed on to any person not authorised by A&A to recieve it. It shall not be copied or modified in full or part without A&A's prior permission. The details furnished in this drawing are for this PROJECT only.

KAJARIA – THE TREND
OSLO OCRE (DARK TILES)
300MMX600MM
MATT FINISH

KAJARIA – THE TREND
OSLO MARFIL (LIGHT TILES)
300MMX600MM
MATT FINISH

KAJARIA – THE TREND
JAZZ BROWN –
SPARKLE/DECOR
300MMX600MM
MATT FINISH

GRANITE – DARK GRANITE
DARK MINT PEARL

CLIENT:
MASONIC CHILDREN'S HOSPITAL

PROJECT NAME:
HOSPITAL AT COIMBATORE

DRAWING TITLE:
B BLOCK – SECOND FLOOR – TYPICAL TOILET TILE LAYOUT

DATE	DWG NO.	DRAWN BY
04.11.22	A2:01	DOREEN S.
SCALE	PROJ CODE	CHECKED BY
1"=6'0"	COM–202–2020	ARUN P.

ARUN AND ASSOCIATES
ARCHITECTS & PLANNERS
1289, TRICHY ROAD,
COIMBATORE – 641 018.

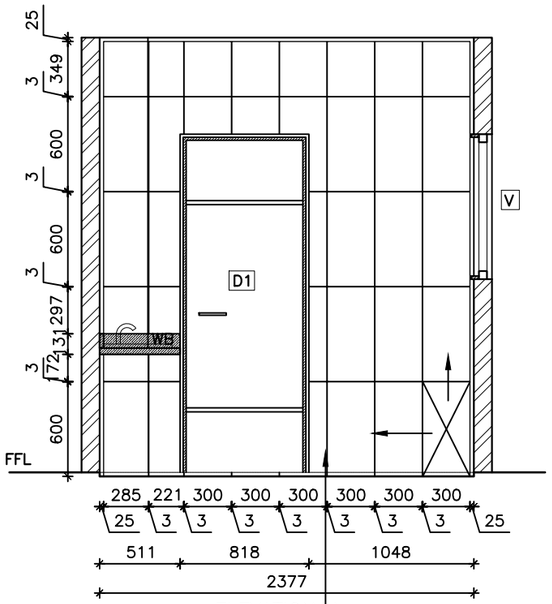

ELEVATION A

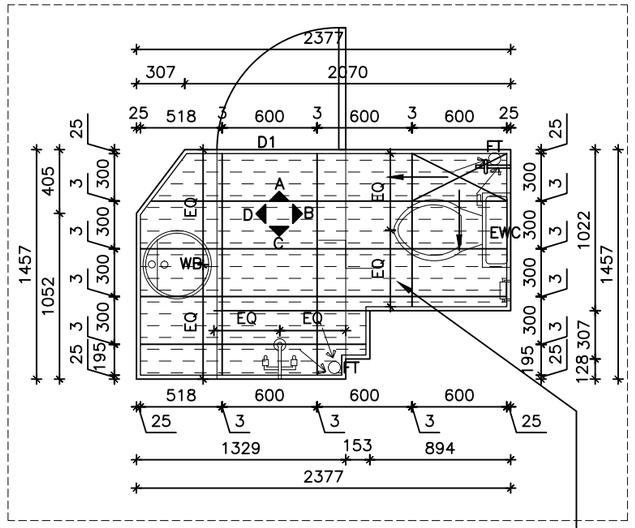

PART PLAN – THIRD FLOOR TOILET

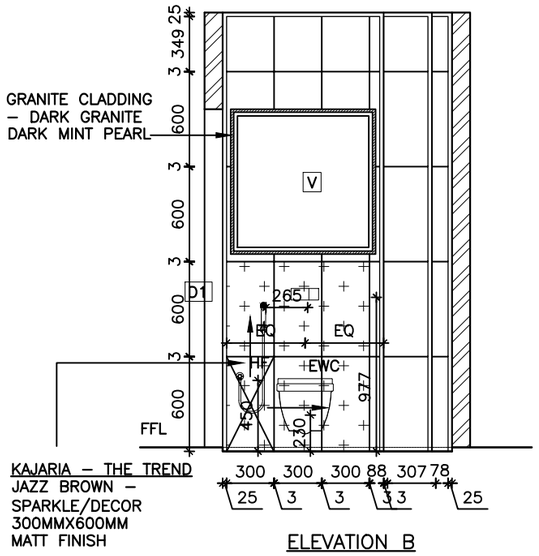

ELEVATION B

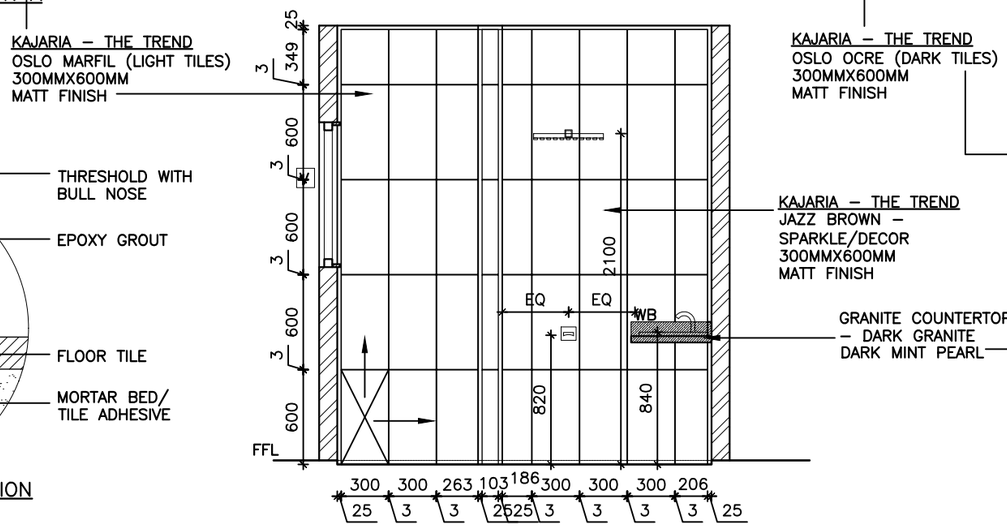

ELEVATION C

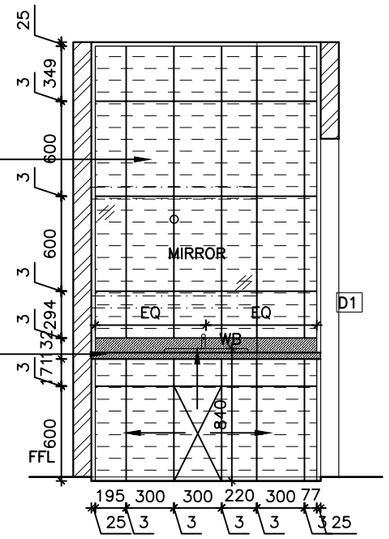

ELEVATION D

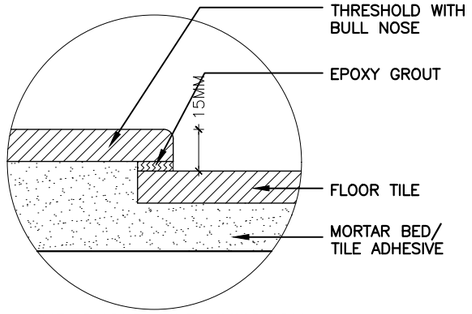

THRESHOLD TILE JUNCTION
(DETAIL–A)

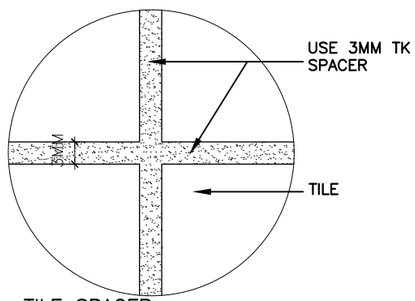

TILE SPACER
(DETAIL–B)

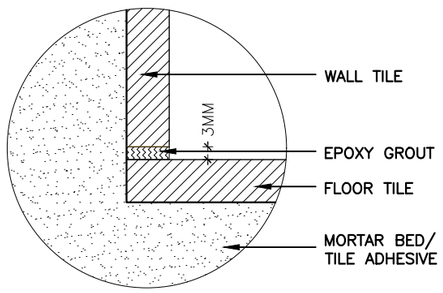

FLOOR AND WALL
TILE JUNCTION

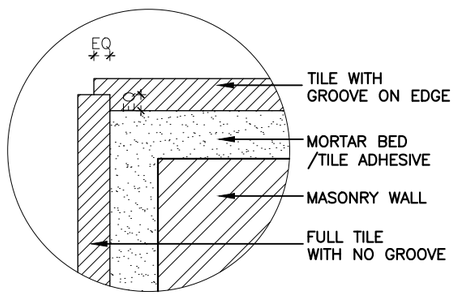

TILE 90° JUNCTION

This drawing is the property of ARUN AND ASSOCIATES (A&A) and shall not be passed on to any person not authorised by A&A to recieve it. It shall not be copied or modified in full or part without A&A's prior permission. The details furnished in this drawing are for this PROJECT only.

KAJARIA – THE TREND
OSLO OCRE (DARK TILES)
300MMX600MM
MATT FINISH

KAJARIA – THE TREND
OSLO MARFIL (LIGHT TILES)
300MMX600MM
MATT FINISH

KAJARIA – THE TREND
JAZZ BROWN –
SPARKLE/DECOR
300MMX600MM
MATT FINISH

GRANITE – DARK GRANITE
DARK MINT PEARL

CLIENT:
MASONIC CHILDREN'S HOSPITAL

PROJECT NAME:
HOSPITAL AT COIMBATORE

DRAWING TITLE:
B BLOCK – THIRD FLOOR – TYPICAL TOILET TILE LAYOUT

DATE	DWG NO.	DRAWN BY
04.11.22	A2:01	DOREEN S.
SCALE	PROJ CODE	CHECKED BY
1"=6'0"	COM–202–2020	ARUN P.

ARUN AND ASSOCIATES
ARCHITECTS & PLANNERS
1289, TRICHY ROAD,
COIMBATORE – 641 018.

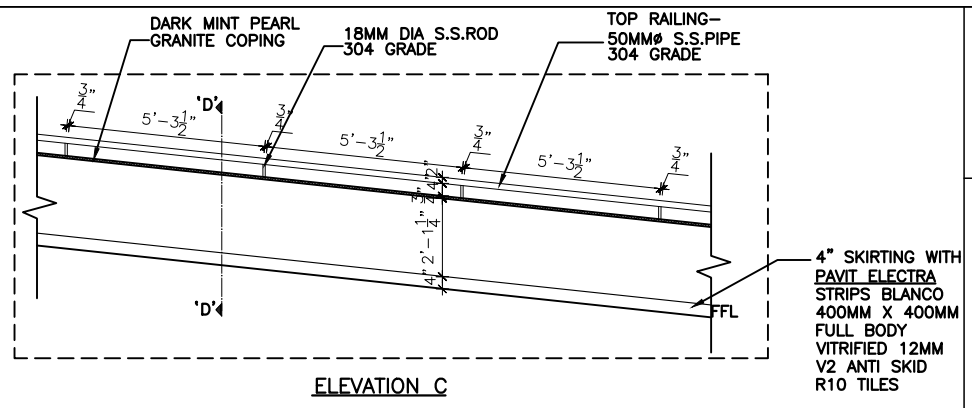

ELEVATION C

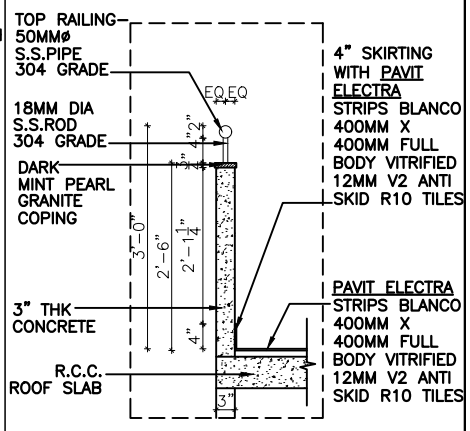

SECTION 'DD'

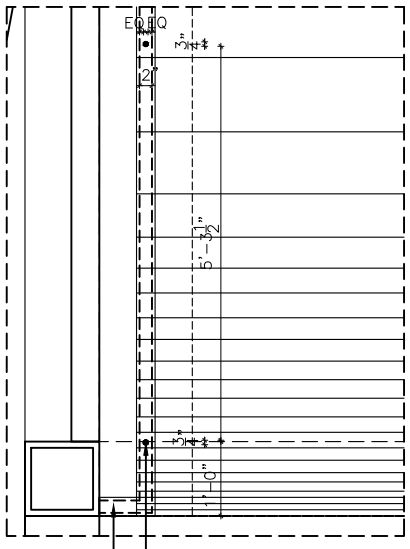

DETAIL B

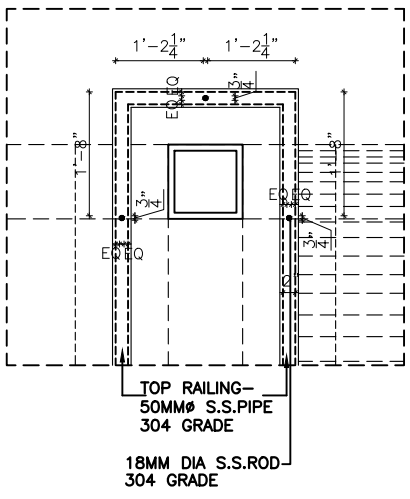

DETAIL A

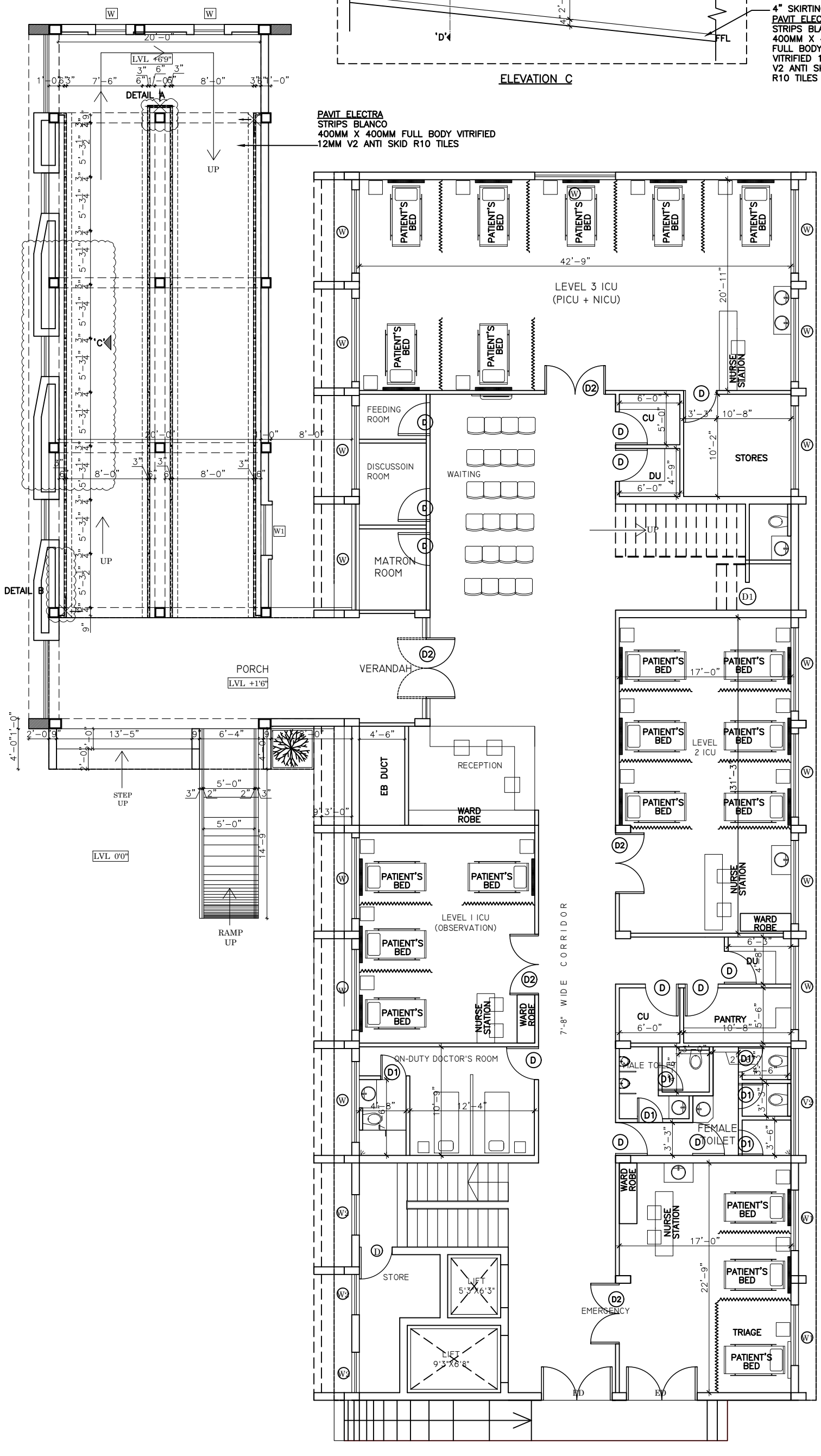

This drawing is the property of ARUN AND ASSOCIATES (A&A) and shall not be passed on to any person not authorised by A&A to recieve it. It shall not be copied or modified in full or part without A&A's prior permission. The details furnished in this drawing are for this PROJECT only.

WALKING BRIDGE AREA :1620 SQ.FT
RAMP AREA :1723 SQ.FT
TOTAL RAMP AREA :5150 SQ.FT

CLIENT:
MASONIC CHILDREN'S HOSPITAL

PROJECT NAME:
HOSPITAL AT COIMBATORE

DRAWING TITLE:
HANDRAIL DETAIL

DATE	DWG NO.	DRAWN BY
14.10.22	A2:01	DOREEN S.
SCALE	PROJ CODE	CHECKED BY
1"=10'0"	COM–202–2020	ARUN P.

ARUN AND ASSOCIATES
ARCHITECTS & PLANNERS
1289, TRICHY ROAD,

This drawing is the property of ARUN AND ASSOCIATES (A&A) and shall not be passed on to any person not authorised by A&A to recieve it. It shall not be copied or modified in full or part without A&A's prior permission. The details furnished in this drawing are for this PROJECT only.

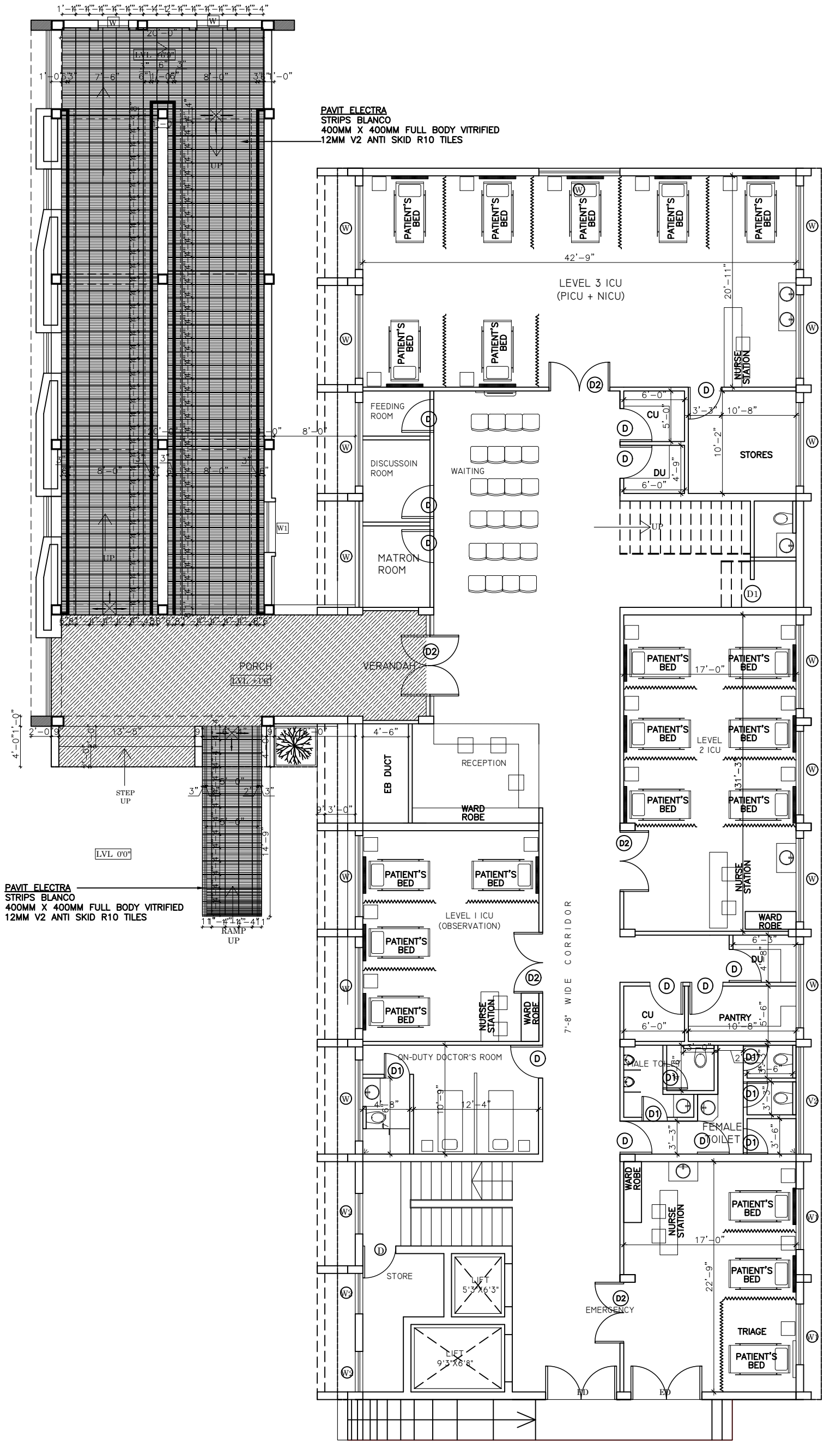

GRANITE FLOORING – LIGHT GRANITE – SPARKLE BROWN – COLOUR YET TO BE CHOSEN

NOTE:
THE GRAINS OF THE TILES TO BE LAID PERPENDICULAR TO THE SLOPE OF THE RAMP

WALKING BRIDGE AREA :1620 SQ.FT
RAMP AREA :1723 SQ.FT
TOTAL RAMP AREA :5150 SQ.FT

CLIENT:
MASONIC CHILDREN'S HOSPITAL

PROJECT NAME:
HOSPITAL AT COIMBATORE

DRAWING TITLE:
RAMP TILING DETAIL

DATE	DWG NO.	DRAWN BY
02.11.22	A2:01	DOREEN S.
SCALE	PROJ CODE	CHECKED BY
1"=10'0"	COM-202-2020	ARUN P.

ARUN AND ASSOCIATES
ARCHITECTS & PLANNERS
1289, TRICHY ROAD,
COIMBATORE – 641 018.

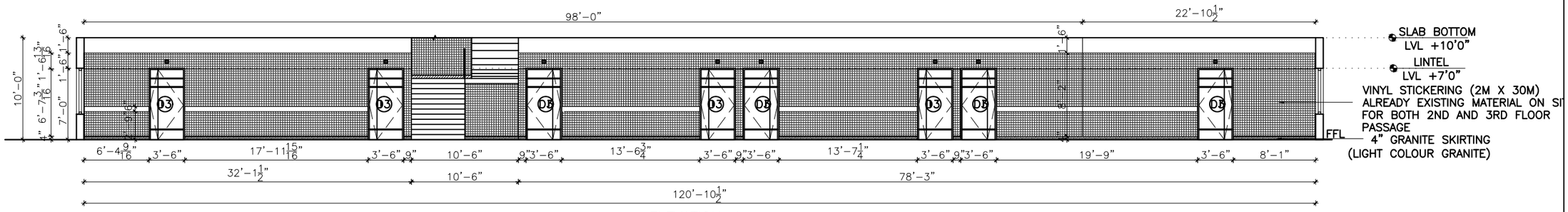

ELEVATION–A

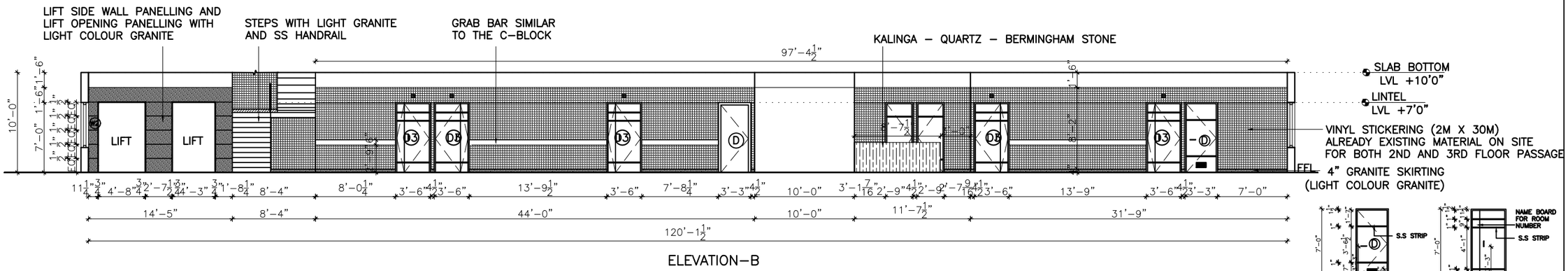

ELEVATION–B

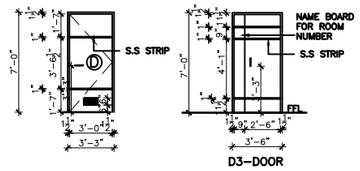

D3–DOOR

KALINGA – QUARTZ – BERMINGHAM STONE
TO BE USED FOR NURSE STATION TABLE
TOPS

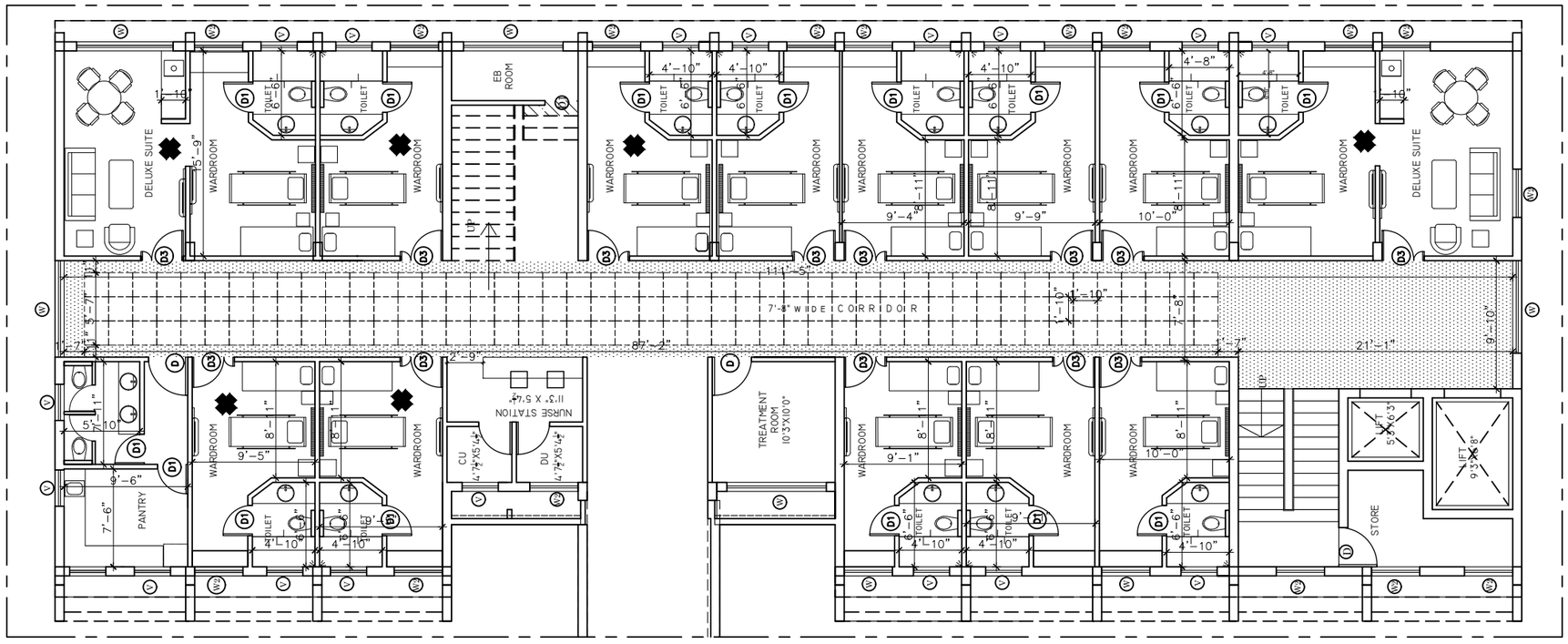

PART PLAN

This drawing is the property of ARUN AND ASSOCIATES (A&A) and shall not be passed on to any person not authorised by A&A to recieve it. It shall not be copied or modified in full or part without A&A's prior permission. The details furnished in this drawing are for this PROJECT only.

CLIENT:
MASONIC CHILDREN'S HOSPITAL

PROJECT NAME:
HOSPITAL AT COIMBATORE

DRAWING TITLE:
SECOND FLOOR CORRIDOR–ELEVATION

DATE	DWG NO.	DRAWN BY	
25.10.22	A2:01	DOREEN S.	N
SCALE	PROJ CODE	CHECKED BY	
1"=10'0"	RES–338–2018	ARUN P.	

ARUN AND ASSOCIATES
ARCHITECTS & PLANNERS
1289, TRICHY ROAD,
COIMBATORE – 641 018.

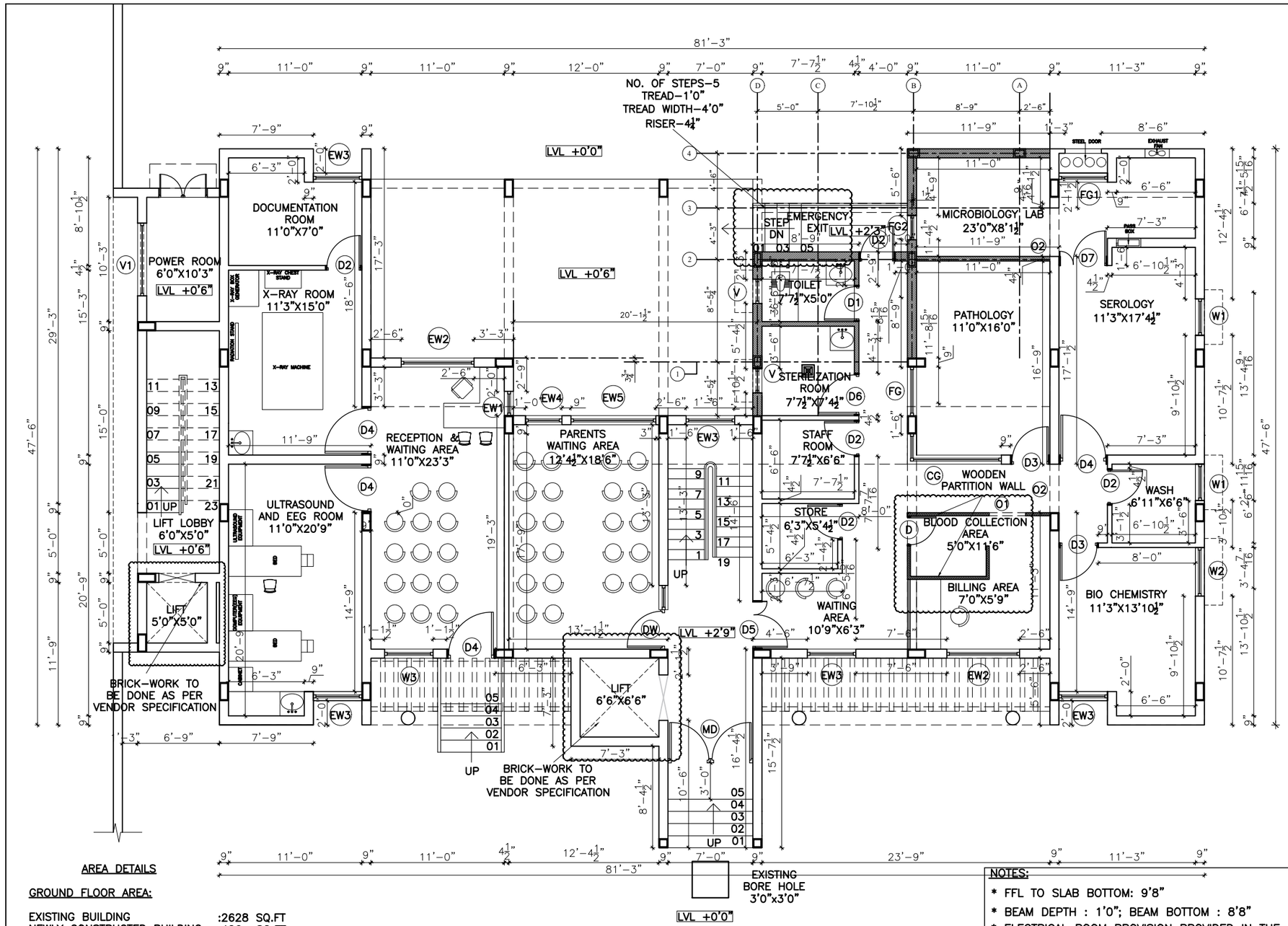

JOINERY DETAILS:

WINDOWS:

NO.	TYPE	NAME	SILL.HT	SIZE	GF	FF	TF
1.	W1	WINDOW	4'0"	3'0"X3'0"	2	–	–
2.	W2	WINDOW	4'0"	4'0"X3'0"	1	–	–
3.	W3	WINDOW	2'6"	4'0"X4'6"	1	6	2
4.	W4	WINDOW	3'0"	4'0"X4'0"	–	1	–
5.	W5	WINDOW	2'6"	6'0"X4'6"	–	11	–
6.	W6	WINDOW	3'0"	6'0"X4'0"	–	1	–

FIXED GLASS:

1.	CG	CORNER GLASS	4'0"	NORTH:7'9"X3'0" WEST :2'6"X3'0"	1	–	–
2.	FG	FIXED GLASS	4'0"	4'0"X4'0"	1	–	–
3.	FG1	FIXED GLASS	4'0"	4'0"X3'0"	1	–	–
4.	FG2	FIXED GLASS	4'0"	2'0"X3'0"	1	–	–

VENTILATOR:

1.	V	VENTILATOR	5'0"	2'0"X2'0"	2	–	–
1.	V1	VENTILATOR	5'0"	6'0"X2'0"	1	–	–

DOORS:

NO.	TYPE	NAME	SILL.HT	SIZE	GF	FF	TF
1.	MD	MAIN DOOR (EXISTING)	––	7'0"X7'0"	1	–	–
2.	DW	DOOR FIXED WINDOW (EXISTING)	–– 2'6"	3'3"X7'0" 2'0"X4'6"	1	2	–
3.	D	DOOR	––	2'6"X7'0"	1	–	–
4.	D1	DOOR	––	2'9"X7'0"	1	–	–
5.	D2	DOOR	––	3'0"X7'0"	6	1	1
6.	D3	DOOR	––	3'3"X7'0"	2	–	–
7.	D4	DOOR	––	4'0"X7'0"	4	2	–
8.	D5	DOOR	––	2'9 1/2"X7'0" 1'2 1/2"X7'0"	1	1	–
9.	D6	DOOR	––	3'6"X7'0"	1	–	–
10.	D7	DOOR	––	2'9 1/2"X7'0" 1'2 1/2"X7'0"	1	–	–

WINDOWS:

1.	EW1	EXISTING WINDOW	2'6"	2'0"X4'6"	1	–	–
2.	EW2	EXISTING WINDOW	2'6"	6'0"X4'6"	2	–	–
3.	EW3	EXISTING WINDOW	2'6"	4'0"X4'6"	5	–	–
4.	EW4	EXISTING WINDOW	4'0"	3'0"X3'0"	1	–	–
5.	EW5	EXISTING WINDOW	3'3"	7'0"X3'9"	1	–	–

OPENINGS:

1.	O1	OPENING	–	3'0"X7'0"	1	–	–
2.	O2	OPENING	–	4'0"XB.B	2	–	–

AREA DETAILS

GROUND FLOOR AREA:

EXISTING BUILDING	:2628 SQ.FT
NEWLY CONSTRUCTED BUILDING	:426 SQ.FT
ROOF EXTENDED	:560 SQ.FT
ENTRENCE AND LIFT EXTENDED	:185 SQ.FT
SERVICE STAIRCASE & POWER ROOM	:286 SQ.FT
GROUND FLOOR AREA	:4085 SQ.FT

FIRST FLOOR AREA

DINING	:1430 SQ.FT
PANTRY	:209.25 SQ.FT
OPEN HALL	:1570 SQ.FT
SERVICE STAIRCASE AND LIFT	:205.5 SQ.FT
STAIRS AND LIFT	:300 SQ.FT
FIRST FLOOR AREA	:3714.75 SQ.FT
TOTAL AREA	:7800 SQ.FT

SERVICE STAIRCASE:

NO OF STEPS	:23
TREAD	:1'0"
TREAD WIDTH	:3'0"
RISER	:6.40"

FOR REFERENCE ONLY

TO BE CONSTRUCTED PORTION

This drawing is the property of ARUN AND ASSOCIATES (A&A) and shall not be passed on to any person not authorised by A&A to recieve it. It shall not be copied or modified in full or part without A&A's prior permission. The details furnished in this drawing are for this PROJECT only.

NOTES:

* FFL TO SLAB BOTTOM: 9'8"
* BEAM DEPTH : 1'0"; BEAM BOTTOM : 8'8"
* ELECTRICAL ROOM PROVISION PROVIDED IN THE BASEMENT

REVISIONS:

NO.	DESCRIPTION	CHECKED	DATE
8.	REVISION 8(SCHEME)	ARUN.P	11.07.22
7.	REVISION 7(SCHEME)	ARUN.P	29.06.22
6.	REVISION 6(SCHEME)	ARUN.P	09.04.22
5.	REVISION 5(TOILET,DOORS)	ARUN.P	22.01.21
4.	REVISION 4	ARUN.P	20.01.21
3.	REVISION 3	ARUN.P	07.01.21
2.	REVISION 2	ARUN.P	04.12.20
1.	REVISION 1	ARUN.P	16.11.20

CLIENT:
MASONIC CHILDREN'S HOSPITAL

PROJECT NAME:
HOSPITAL AT COIMBATORE

DRAWING TITLE:
GROUND FLOOR – WORKING DRAWING

DATE	DWG NO.	DRAWN BY
12.08.20	A2:01	JEREMIAH D
SCALE	PROJ CODE	CHECKED BY
1"=8'0"	COM–202–2020	ARUN P.

N

ARUN AND ASSOCIATES
ARCHITECTS & PLANNERS
1289, TRICHY ROAD,
COIMBATORE – 641 018.

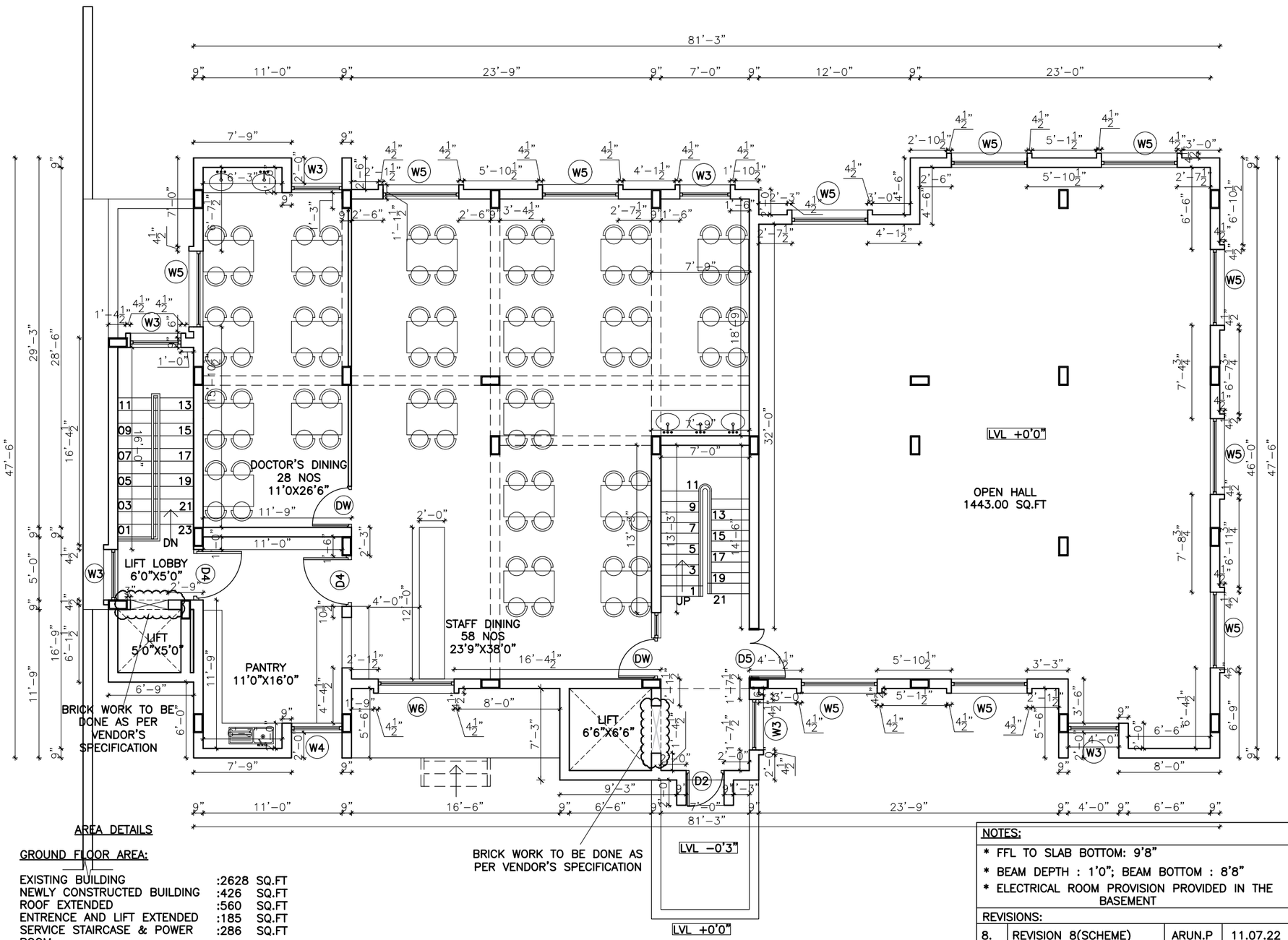

AREA DETAILS

GROUND FLOOR AREA:

EXISTING BUILDING	:2628 SQ.FT
NEWLY CONSTRUCTED BUILDING	:426 SQ.FT
ROOF EXTENDED	:560 SQ.FT
ENTRENCE AND LIFT EXTENDED	:185 SQ.FT
SERVICE STAIRCASE & POWER ROOM	:286 SQ.FT
GROUND FLOOR AREA	:4085 SQ.FT

FIRST FLOOR AREA

DINING	:1430 SQ.FT
PANTRY	:209.25 SQ.FT
OPEN HALL	:1570 SQ.FT
SERVICE STAIRCASE AND LIFT	:205.5 SQ.FT
STAIRS AND LIFT	:300 SQ.FT
FIRST FLOOR AREA	:3714.75 SQ.FT
TOTAL AREA	:7800 SQ.FT

SERVICE STAIRCASE:

NO OF STEPS	:23
TREAD	:1'0"
TREAD WIDTH	:3'0"
RISER	:6.40"

FOR REFERENCE ONLY

TO BE CONSTRUCTED PORTION

This drawing is the property of ARUN AND ASSOCIATES (A&A) and shall not be passed on to any person not authorised by A&A to recieve it. It shall not be copied or modified in full or part without A&A's prior permission. The details furnished in this drawing are for this PROJECT only.

NOTES:

* FFL TO SLAB BOTTOM: 9'8"
* BEAM DEPTH : 1'0"; BEAM BOTTOM : 8'8"
* ELECTRICAL ROOM PROVISION PROVIDED IN THE BASEMENT

REVISIONS:

NO.	DESCRIPTION	CHECKED	DATE
8.	REVISION 8(SCHEME)	ARUN.P	11.07.22
7.	REVISION 7(SCHEME)	ARUN.P	29.06.22
6.	REVISION 6(SCHEME)	ARUN.P	09.04.22
5.	REVISION 5(TOILET,DOORS)	ARUN.P	22.01.21
4.	REVISION 4	ARUN.P	20.01.21
3.	REVISION 3	ARUN.P	07.01.21
2.	REVISION 2	ARUN.P	04.12.20
1.	REVISION 1	ARUN.P	16.11.20

JOINERY DETAILS:

WINDOWS:

NO.	TYPE	NAME	SILL.HT	SIZE	GF	FF	TF
1.	W1	WINDOW	4'0"	3'0"X3'0"	2	–	–
2.	W2	WINDOW	4'0"	4'0"X3'0"	1	–	–
3.	W3	WINDOW	2'6"	4'0"X4'6"	1	6	2
4.	W4	WINDOW	3'0"	4'0"X4'0"	–	1	–
5.	W5	WINDOW	2'6"	6'0"X4'6"	–	11	–
6.	W6	WINDOW	3'0"	6'0"X4'0"	–	1	–

FIXED GLASS:

1.	CG	CORNER GLASS	4'0"	NORTH:7'9"X3'0" WEST :2'6"X3'0"	1	–	–
2.	FG	FIXED GLASS	4'0"	4'0"X4'0"	1	–	–
3.	FG1	FIXED GLASS	4'0"	4'0"X3'0"	1	–	–
4.	FG2	FIXED GLASS	4'0"	2'0"X3'0"	1	–	–

VENTILATOR:

1.	V	VENTILATOR	5'0"	2'0"X2'0"	2	–	–
1.	V1	VENTILATOR	5'0"	6'0"X2'0"	1	–	–

DOORS:

NO.	TYPE	NAME	SILL.HT	SIZE	GF	FF	TF
1.	MD	MAIN DOOR (EXISTING)	--	7'0"X7'0"	1	–	–
2.	DW	DOOR FIXED WINDOW (EXISTING)	-- 2'6"	3'3"X7'0" 2'0"X4'6"	1	2	–
3.	D	DOOR	--	2'6"X7'0"	1	–	–
4.	D1	DOOR	--	2'9"X7'0"	1	–	–
5.	D2	DOOR	--	3'0"X7'0"	6	1	1
6.	D3	DOOR	--	3'3"X7'0"	2	–	–
7.	D4	DOOR	--	4'0"X7'0"	4	2	–
8.	D5	DOOR	--	2'9 1/2"X7'0" 1'2 1/2"X7'0"	1	1	–
9.	D6	DOOR	--	3'6"X7'0"	1	–	–
10.	D7	DOOR	--	2'9 1/2"X7'0" 1'2 1/2"X7'0"	1	–	–

WINDOWS:

1.	EW1	EXISTING WINDOW	2'6"	2'0"X4'6"	1	–	–
2.	EW2	EXISTING WINDOW	2'6"	6'0"X4'6"	2	–	–
3.	EW3	EXISTING WINDOW	2'6"	4'0"X4'6"	5	–	–
4.	EW4	EXISTING WINDOW	4'0"	3'0"X3'0"	1	–	–
5.	EW5	EXISTING WINDOW	3'3"	7'0"X3'9"	1	–	–

OPENINGS:

1.	O1	OPENING	–	3'0"X7'0"	1	–	–
2.	O2	OPENING	–	4'0"XB.B	2	–	–

CLIENT:
MASONIC CHILDREN'S HOSPITAL

PROJECT NAME:
HOSPITAL AT COIMBATORE

DRAWING TITLE:
FIRST FLOOR – WORKING DRAWING

DATE	DWG NO.	DRAWN BY
12.08.20	A2:01	JEREMIAH D
SCALE	PROJ CODE	CHECKED BY
1"=8'0"	COM-202-2020	ARUN P.

N

ARUN AND ASSOCIATES
ARCHITECTS & PLANNERS
1289, TRICHY ROAD,
COIMBATORE – 641 018.

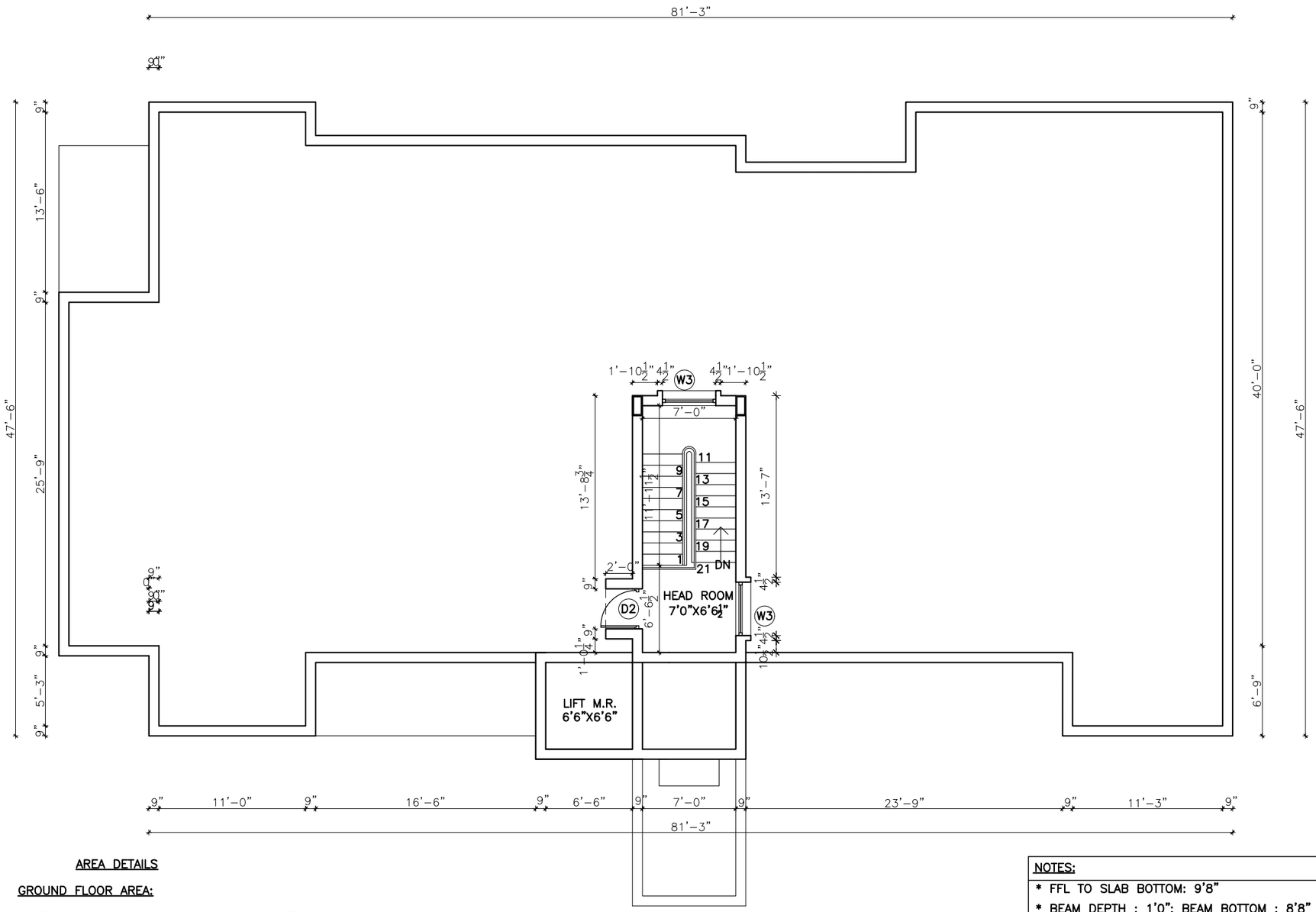

AREA DETAILS

GROUND FLOOR AREA:

EXISTING BUILDING	:2628 SQ.FT
NEWLY CONSTRUCTED BUILDING	:426 SQ.FT
ROOF EXTENDED	:560 SQ.FT
ENTRENCE AND LIFT EXTENDED	:185 SQ.FT
SERVICE STAIRCASE & POWER ROOM	:286 SQ.FT
GROUND FLOOR AREA	:4085 SQ.FT

FIRST FLOOR AREA

DINING	:1430 SQ.FT
PANTRY	:209.25 SQ.FT
OPEN HALL	:1570 SQ.FT
SERVICE STAIRCASE AND LIFT	:205.5 SQ.FT
STAIRS AND LIFT	:300 SQ.FT
FIRST FLOOR AREA	:3714.75 SQ.FT
TOTAL AREA	:7800 SQ.FT

SERVICE STAIRCASE:

NO OF STEPS	:23
TREAD	:1'0"
TREAD WIDTH	:3'0"
RISER	:6.40"

TO BE CONSTRUCTED PORTION

This drawing is the property of ARUN AND ASSOCIATES (A&A) and shall not be passed on to any person not authorised by A&A to recieve it. It shall not be copied or modified in full or part without A&A's prior permission. The details furnished in this drawing are for this PROJECT only.

NOTES:

* FFL TO SLAB BOTTOM: 9'8"
* BEAM DEPTH : 1'0"; BEAM BOTTOM : 8'8"
* ELECTRICAL ROOM PROVISION PROVIDED IN THE BASEMENT

REVISIONS:

NO.	DESCRIPTION	CHECKED	DATE
8.	REVISION 8(SCHEME)	ARUN.P	11.07.22
7.	REVISION 7(SCHEME)	ARUN.P	29.06.22
6.	REVISION 6(SCHEME)	ARUN.P	09.04.22
5.	REVISION 5(TOILET,DOORS)	ARUN.P	22.01.21
4.	REVISION 4	ARUN.P	20.01.21
3.	REVISION 3	ARUN.P	07.01.21
2.	REVISION 2	ARUN.P	04.12.20
1.	REVISION 1	ARUN.P	16.11.20

JOINERY DETAILS:

WINDOWS:

NO.	TYPE	NAME	SILL.HT	SIZE	GF	FF	TF
1.	W1	WINDOW	4'0"	3'0"X3'0"	2	–	–
2.	W2	WINDOW	4'0"	4'0"X3'0"	1	–	–
3.	W3	WINDOW	2'6"	4'0"X4'6"	1	6	2
4.	W4	WINDOW	3'0"	4'0"X4'0"	–	1	–
5.	W5	WINDOW	2'6"	6'0"X4'6"	–	11	–
6.	W6	WINDOW	3'0"	6'0"X4'0"	–	1	–

FIXED GLASS:

1.	CG	CORNER GLASS	4'0"	NORTH:7'9"X3'0" WEST :2'6"X3'0"	1	–	–
2.	FG	FIXED GLASS	4'0"	4'0"X4'0"	1	–	–
3.	FG1	FIXED GLASS	4'0"	4'0"X3'0"	1	–	–
4.	FG2	FIXED GLASS	4'0"	2'0"X3'0"	1	–	–

VENTILATOR:

1.	V	VENTILATOR	5'0"	2'0"X2'0"	2	–	–
1.	V1	VENTILATOR	5'0"	6'0"X2'0"	1	–	–

DOORS:

NO.	TYPE	NAME	SILL.HT	SIZE	GF	FF	TF
1.	MD	MAIN DOOR (EXISTING)	--	7'0"X7'0"	1	–	–
2.	DW	DOOR FIXED WINDOW (EXISTING)	-- 2'6"	3'3"X7'0" 2'0"X4'6"	1	2	–
3.	D	DOOR	--	2'6"X7'0"	1	–	–
4.	D1	DOOR	--	2'9"X7'0"	1	–	–
5.	D2	DOOR	--	3'0"X7'0"	6	1	1
6.	D3	DOOR	--	3'3"X7'0"	2	–	–
7.	D4	DOOR	--	4'0"X7'0"	4	2	–
8.	D5	DOOR	--	2'9 1/2"X7'0" 1'2 1/2"X7'0"	1	1	–
9.	D6	DOOR	--	3'6"X7'0"	1	–	–
10.	D7	DOOR	--	2'9 1/2"X7'0" 1'2 1/2"X7'0"	1	–	–

WINDOWS:

1.	EW1	EXISTING WINDOW	2'6"	2'0"X4'6"	1	–	–
2.	EW2	EXISTING WINDOW	2'6"	6'0"X4'6"	2	–	–
3.	EW3	EXISTING WINDOW	2'6"	4'0"X4'6"	5	–	–
4.	EW4	EXISTING WINDOW	4'0"	3'0"X3'0"	1	–	–
5.	EW5	EXISTING WINDOW	3'3"	7'0"X3'9"	1	–	–

OPENINGS:

1.	O1	OPENING	–	3'0"X7'0"	1	–	–
2.	O2	OPENING	–	4'0"XB.B	2	–	–

CLIENT:
MASONIC CHILDREN'S HOSPITAL

PROJECT NAME:
HOSPITAL AT COIMBATORE

DRAWING TITLE:
TERRACE FLOOR PLAN

DATE	DWG NO.	DRAWN BY
27.10.22	A2:01	DOREEN S.
SCALE	PROJ CODE	CHECKED BY
1"=8'0"	COM–202–2020	ARUN P.

N

ARUN AND ASSOCIATES
ARCHITECTS & PLANNERS
1289, TRICHY ROAD,
COIMBATORE – 641 018.

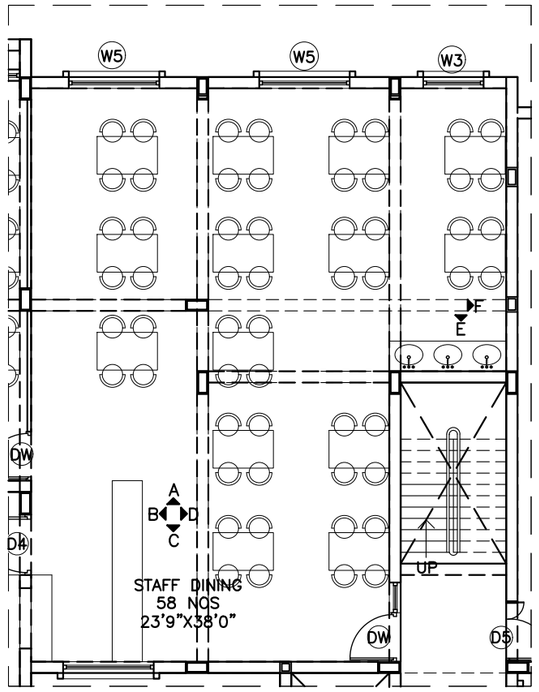

PART PLAN: STAFF DINING

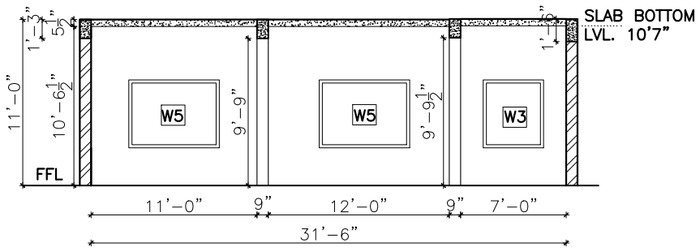

ELEVATION–A

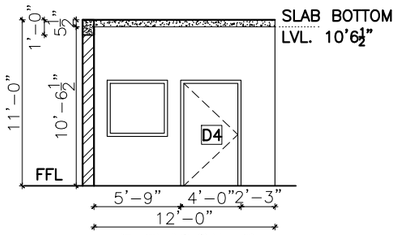

ELEVATION–B

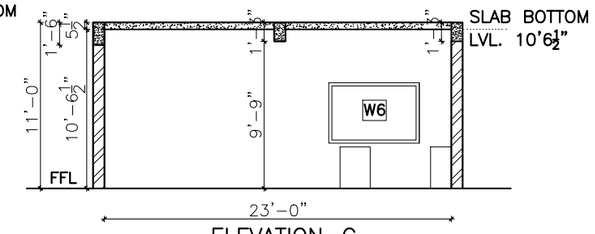

ELEVATION–C

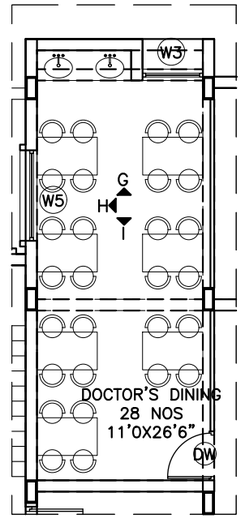

PART PLAN: DOCTOR'S DINING

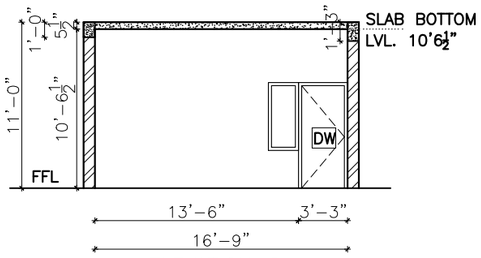

ELEVATION–D

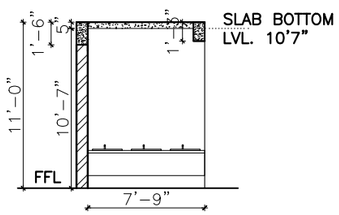

ELEVATION–E

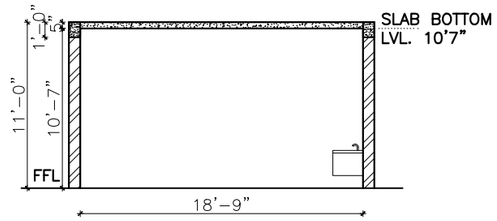

ELEVATION–F

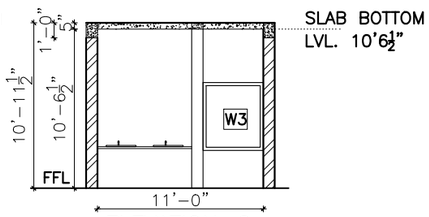

ELEVATION–G

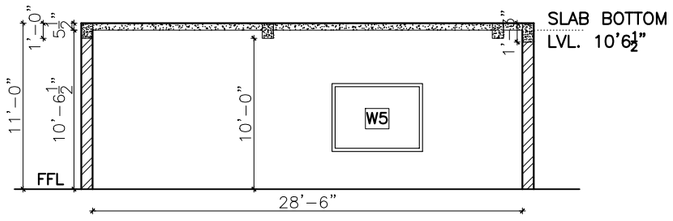

ELEVATION–H

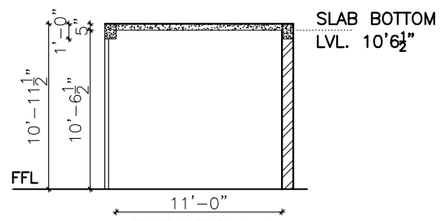

ELEVATION–I

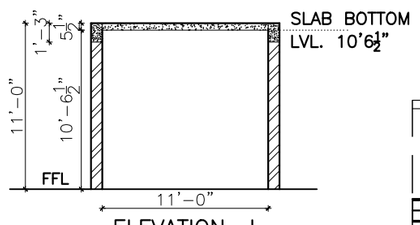

ELEVATION–J

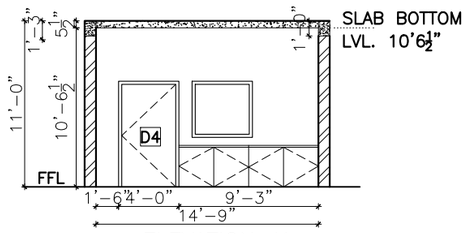

ELEVATION–K

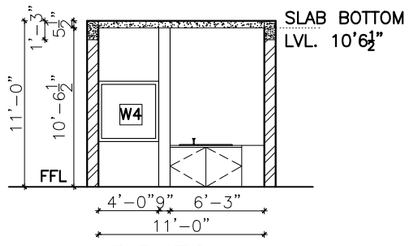

ELEVATION–L

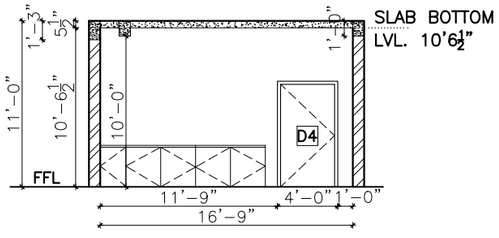

ELEVATION–M

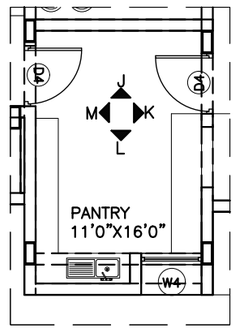

PART PLAN: PANTRY

This drawing is the property of ARUN AND ASSOCIATES (A&A) and shall not be passed on to any person not authorised by A&A to recieve it. It shall not be copied or modified in full or part without A&A's prior permission. The details furnished in this drawing are for this PROJECT only.

ELECTRICAL FITTINGS DETAIL:

NO	SYMBOL	DESCRIPTION
01		SWITCH BOARD AT 4'6" FROM F.F.L TO THE BOTTOM OF SWITCH PLATE
02		SWITCH BOARD AT 3'3" FROM F.F.L TO THE BOTTOM OF SWITCH PLATE
03		SWITCH BOARD AT 7'3" FROM F.F.L TO THE BOTTOM OF SWITCH PLATE
04		SWITCH BOARD AT 2'7½" FROM F.F.L TO THE BOTTOM OF SWITCH PLATE
05		SWITCH BOARD AT 1'7½" FROM F.F.L TO THE BOTTOM OF SWITCH PLATE
06		SWITCH BOARD AT 0'9" FROM F.F.L TO THE BOTTOM OF SWITCH PLATE
07		FOOT LAMP 9" FROM F.F.L TO THE BOTTOM OF THE LAMP PLATE
08		6 A SHUTTER TYPE SOCKET WITH SWITCH
09		6/16 A SHUTTER TYPE SOCKET WITH SWITCH
10		GEYSER SWITCH
11		WALL BRACKET LIGHT
12		MIRROR LIGHT
13		PEDESTAL FAN
14		FLUORESCENT TUBE LIGHT
15		CEILING FLUSH TYPE LIGHT FITTING
16		CEILING FAN
17		EXHAUST FAN
18		COVE LIGHT
19		BELL
20		BELL PUSH
21		TELEPHONE
22		DISTRIBUTION BOARD
23		U.P.S.
24		METERING BOARD
25		EARTH POINT
26		EMERGENCY SWITCH
27		GEYSER
28		ONE WAY SWITCH
29		TWO WAY SWITCH
30		CASSETTE AIRCONDITIONER
31		ELECTRIC CHIMNEY SWITCH
32		TELEVISION
33		SPLIT AIR–CONDITIONER
34		OHT AUTOMATIC WATER LVL CONTROLLER
35		DECORATIVE MULTI–BULB LIGHT FITTING

POSITION TO BE DECIDED DURING DADOING

POSITION TO BE DECIDED DURING INTERIOR CARPENTRY

POSITION TO BE DECIDED DURING LANDSCAPING

REVISIONS:

NO.	DESCRIPTION	CHECKED	DATE

CLIENT:
MASONIC HOSPITAL

PROJECT NAME:
HOSPITAL AT COIMBATORE

DRAWING TITLE:
INTERIOR ELEVATION – STAFF DINING, DOCTOR'S DINING, PANTRY

DATE	DWG NO.	DRAWN BY
22.08.22	A2:01	DOREEN S.
SCALE	PROJ CODE	CHECKED BY
1"=6'0"		ARUN P.

ARUN AND ASSOCIATES
ARCHITECTS & PLANNERS
1289, TRICHY ROAD,
COIMBATORE – 641 018.

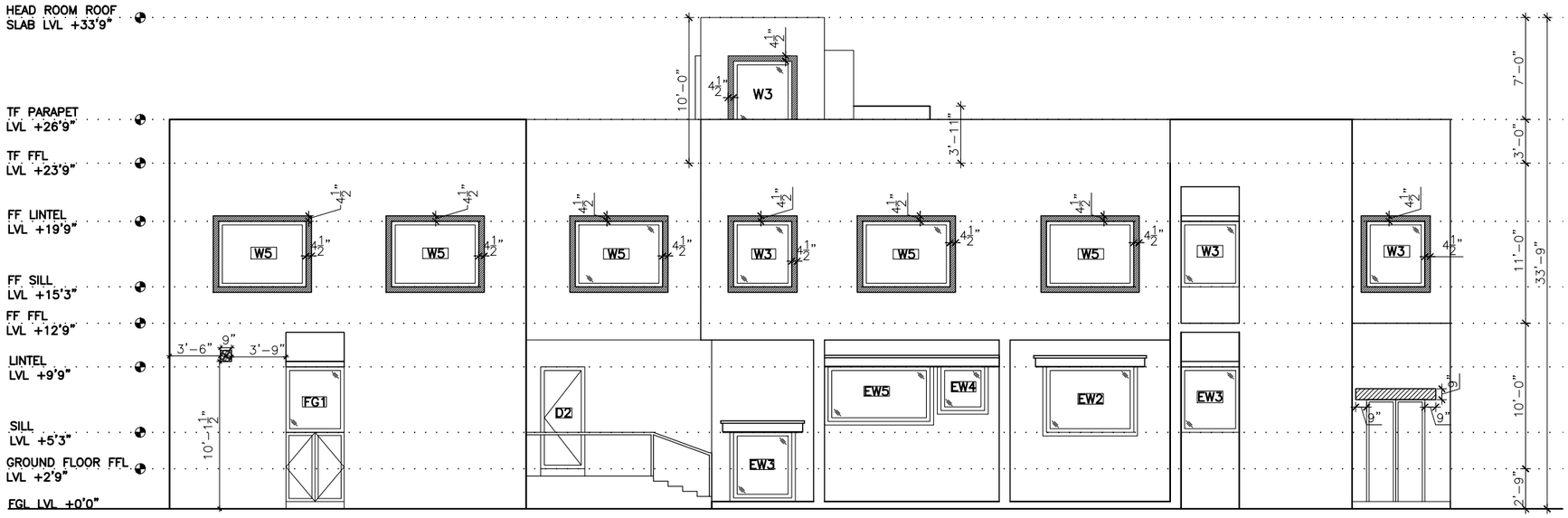

NORTH ELEVATION

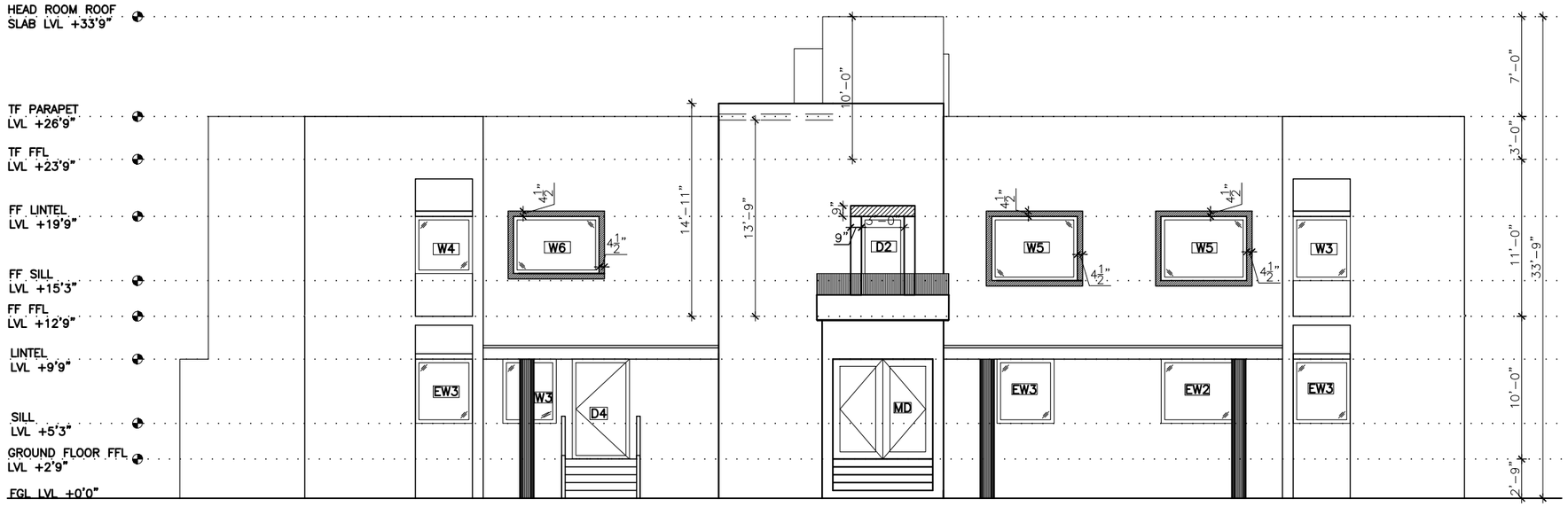

SOUTH ELEVATION

This drawing is the property of ARUN AND ASSOCIATES (A&A) and shall not be passed on to any person not authorised by A&A to recieve it. It shall not be copied or modified in full or part without A&A's prior permission. The details furnished in this drawing are for this PROJECT only.

CLIENT:
MASONIC CHILDREN'S HOSPITAL

PROJECT NAME:
HOSPITAL AT COIMBATORE

DRAWING TITLE:
SERVICES ELEVATION DRAWING

DATE	DWG NO.	DRAWN BY	
01.10.22	A2:01	DOREEN S.	N
SCALE	PROJ CODE	CHECKED BY	
1"=8'0"	COM-202-2020	–	

ARUN AND ASSOCIATES
ARCHITECTS & PLANNERS
1289, TRICHY ROAD,
COIMBATORE – 641 018.

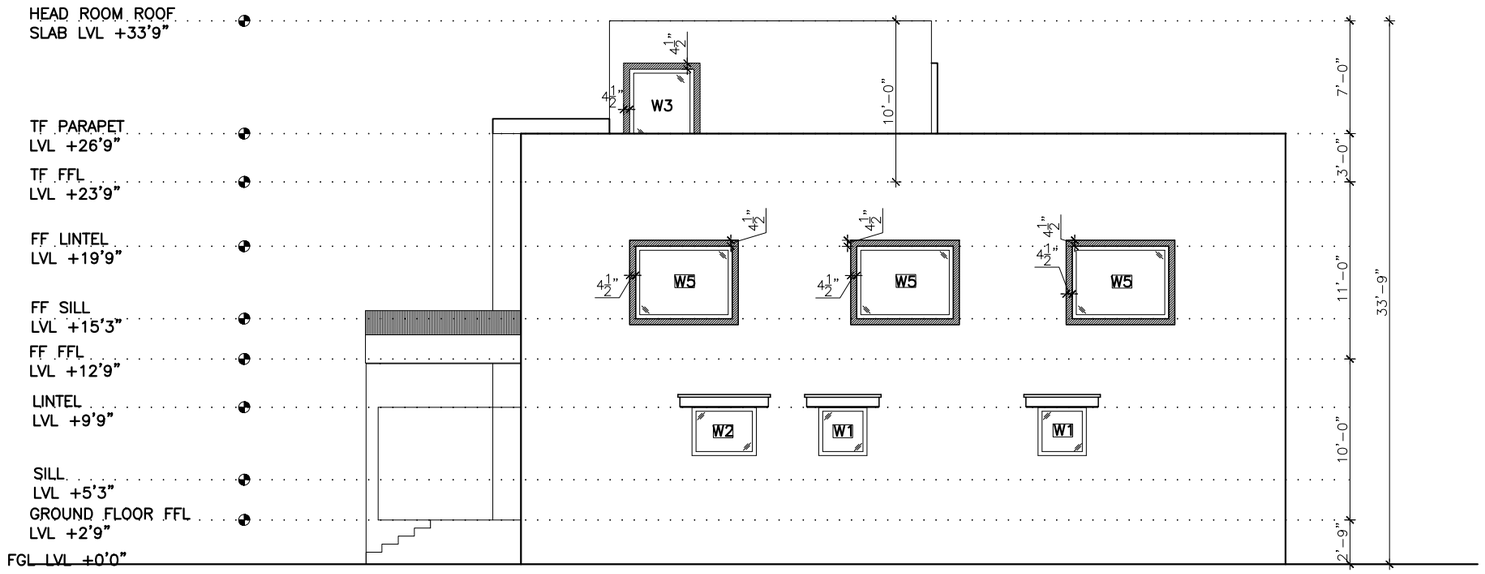

EAST ELEVATION

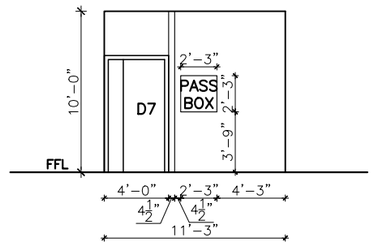

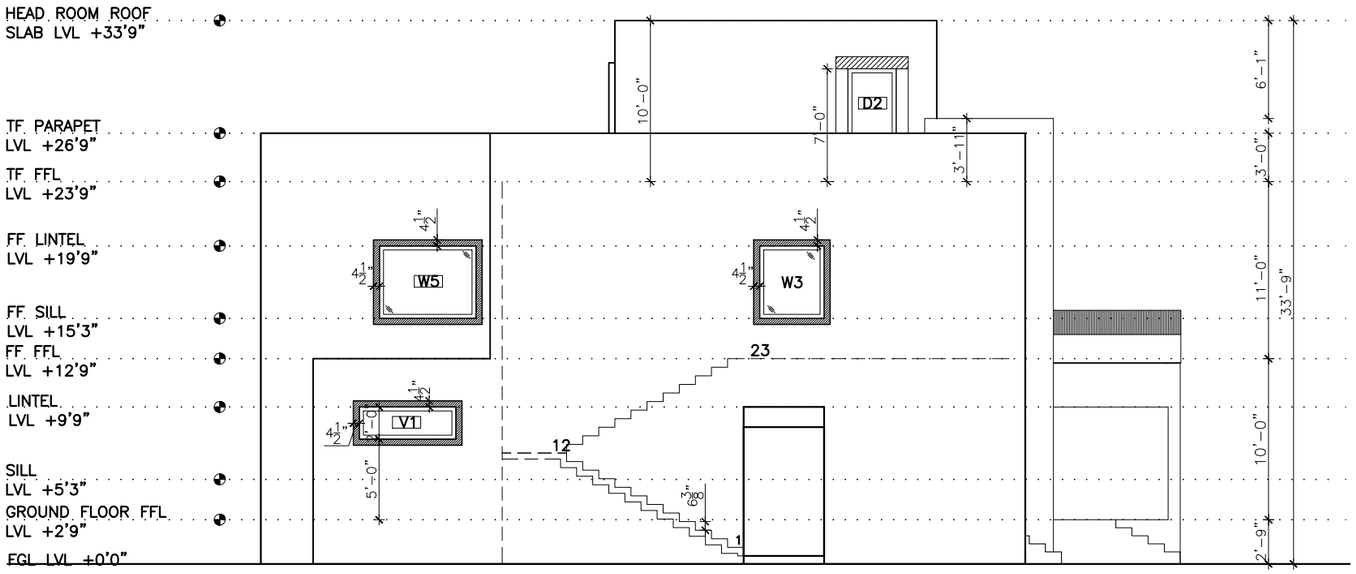

WEST ELEVATION

This drawing is the property of ARUN AND ASSOCIATES (A&A) and shall not be passed on to any person not authorised by A&A to recieve it. It shall not be copied or modified in full or part without A&A's prior permission. The details furnished in this drawing are for this PROJECT only.

CLIENT:
MASONIC CHILDREN'S HOSPITAL

PROJECT NAME:
HOSPITAL AT COIMBATORE

DRAWING TITLE:
SERVICES ELEVATION DRAWING

DATE	DWG NO.	DRAWN BY	
02.10.22	A2:01	DOREEN S.	N
SCALE	PROJ CODE	CHECKED BY	
1"=8'0"	COM-202-2020	–	

ARUN AND ASSOCIATES
ARCHITECTS & PLANNERS
1289, TRICHY ROAD,
COIMBATORE – 641 018.

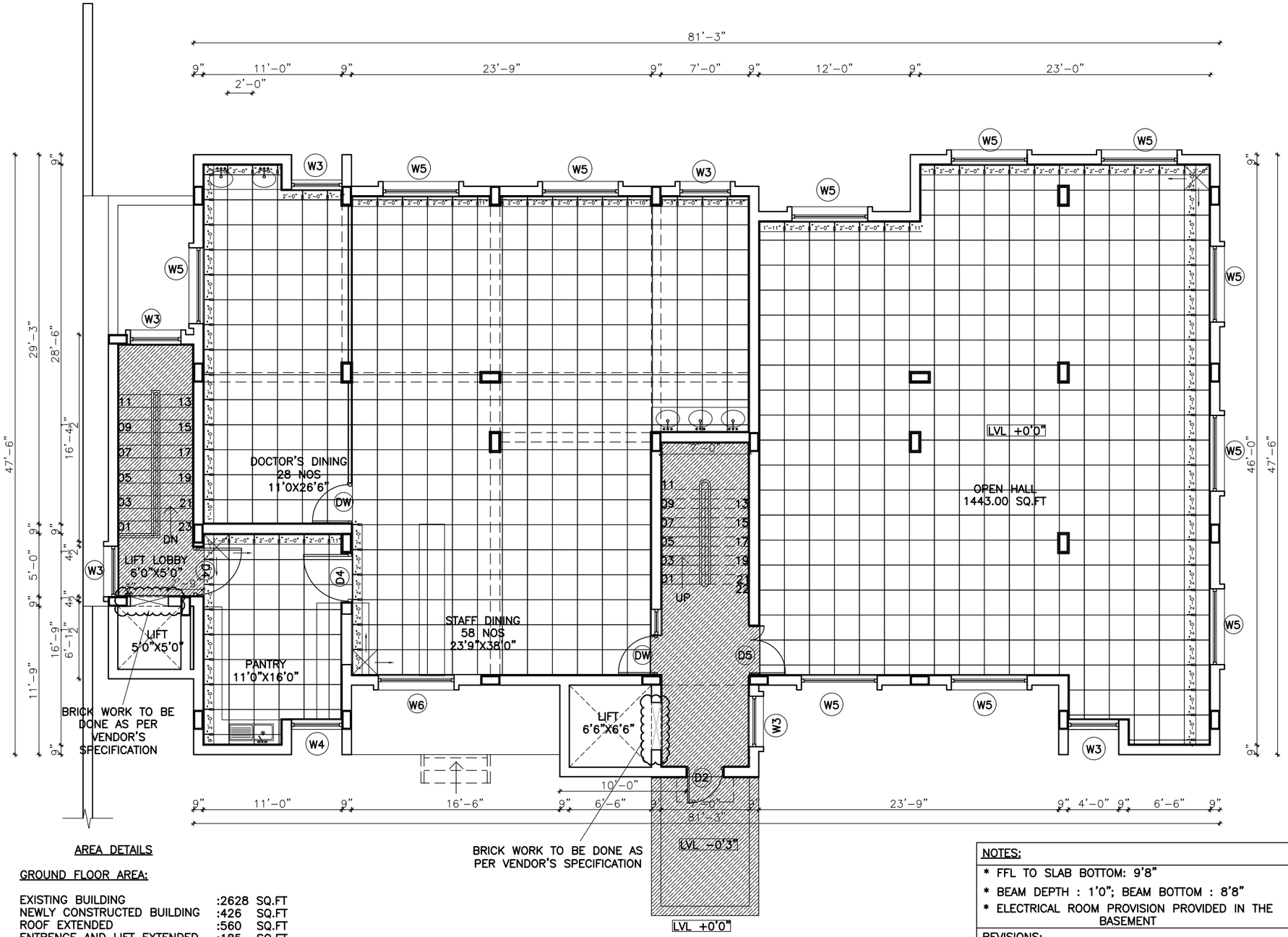

AREA DETAILS

GROUND FLOOR AREA:

EXISTING BUILDING	:2628 SQ.FT
NEWLY CONSTRUCTED BUILDING	:426 SQ.FT
ROOF EXTENDED	:560 SQ.FT
ENTRENCE AND LIFT EXTENDED	:185 SQ.FT
SERVICE STAIRCASE & POWER ROOM	:286 SQ.FT
GROUND FLOOR AREA	:4085 SQ.FT

FIRST FLOOR AREA

DINING	:1430 SQ.FT
PANTRY	:209.25 SQ.FT
OPEN HALL	:1570 SQ.FT
SERVICE STAIRCASE AND LIFT	:205.5 SQ.FT
STAIRS AND LIFT	:300 SQ.FT
FIRST FLOOR AREA	:3714.75 SQ.FT
TOTAL AREA	:7800 SQ.FT

TO BE CONSTRUCTED PORTION

FLOOR TILE:KAJARIA – THE STAR
OSLO MARFIL MATT (600X600) PG.NO 123

S.S WHITE GRANITE–LEATHER FINISH

SERVICE STAIRCASE:

NO OF STEPS	:23
TREAD	:1'0"
TREAD WIDTH	:3'0"
RISER	:6.40"

This drawing is the property of ARUN AND ASSOCIATES (A&A) and shall not be passed on to any person not authorised by A&A to recieve it. It shall not be copied or modified in full or part without A&A's prior permission. The details furnished in this drawing are for this PROJECT only.

NOTES:

* FFL TO SLAB BOTTOM: 9'8"
* BEAM DEPTH : 1'0"; BEAM BOTTOM : 8'8"
* ELECTRICAL ROOM PROVISION PROVIDED IN THE BASEMENT

REVISIONS:

NO.	DESCRIPTION	CHECKED	DATE
8.	REVISION 8(SCHEME)	ARUN.P	11.07.22
7.	REVISION 7(SCHEME)	ARUN.P	29.06.22
6.	REVISION 6(SCHEME)	ARUN.P	09.04.22
5.	REVISION 5(TOILET,DOORS)	ARUN.P	22.01.21
4.	REVISION 4	ARUN.P	20.01.21
3.	REVISION 3	ARUN.P	07.01.21
2.	REVISION 2	ARUN.P	04.12.20
1.	REVISION 1	ARUN.P	16.11.20

JOINERY DETAILS:

WINDOWS:

NO.	TYPE	NAME	SILL.HT	SIZE	GF	FF	TF
1.	W1	WINDOW	4'0"	3'0"X3'0"	2	–	–
2.	W2	WINDOW	4'0"	4'0"X3'0"	1	–	–
3.	W3	WINDOW	2'6"	4'0"X4'6"	1	6	2
4.	W4	WINDOW	3'0"	4'0"X4'0"	–	1	–
5.	W5	WINDOW	2'6"	6'0"X4'6"	–	11	–
6.	W6	WINDOW	3'0"	6'0"X4'0"	–	1	–

FIXED GLASS:

NO.	TYPE	NAME	SILL.HT	SIZE	GF	FF	TF
1.	CG	CORNER GLASS	4'0"	NORTH:7'9"X3'0" WEST :2'6"X3'0"	1	–	–
2.	FG	FIXED GLASS	4'0"	4'0"X4'0"	1	–	–
3.	FG1	FIXED GLASS	4'0"	4'0"X3'0"	1	–	–
4.	FG2	FIXED GLASS	4'0"	2'0"X3'0"	1	–	–

VENTILATOR:

NO.	TYPE	NAME	SILL.HT	SIZE	GF	FF	TF
1.	V	VENTILATOR	5'0"	2'0"X2'0"	2	–	–
1.	V1	VENTILATOR	5'0"	6'0"X2'0"	1	–	–

DOORS:

NO.	TYPE	NAME	SILL.HT	SIZE	GF	FF	TF
1.	MD	MAIN DOOR (EXISTING)	--	7'0"X7'0"	1	–	–
2.	DW	DOOR FIXED WINDOW (EXISTING)	-- 2'6"	3'3"X7'0" 2'0"X4'6"	1	2	–
3.	D	DOOR	--	2'6"X7'0"	1	–	–
4.	D1	DOOR	--	2'9"X7'0"	1	–	–
5.	D2	DOOR	--	3'0"X7'0"	6	1	1
6.	D3	DOOR	--	3'3"X7'0"	2	–	–
7.	D4	DOOR	--	4'0"X7'0"	4	2	–
8.	D5	DOOR	--	2'9 1/2"X7'0" 1'2 1/2"X7'0"	1	1	–
9.	D6	DOOR	--	3'6"X7'0"	1	–	–
10.	D7	DOOR	--	2'9 1/2"X7'0" 1'2 1/2"X7'0"	1	–	–

WINDOWS:

NO.	TYPE	NAME	SILL.HT	SIZE	GF	FF	TF
1.	EW1	EXISTING WINDOW	2'6"	2'0"X4'6"	1	–	–
2.	EW2	EXISTING WINDOW	2'6"	6'0"X4'6"	2	–	–
3.	EW3	EXISTING WINDOW	2'6"	4'0"X4'6"	5	–	–
4.	EW4	EXISTING WINDOW	4'0"	3'0"X3'0"	1	–	–
5.	EW5	EXISTING WINDOW	3'3"	7'0"X3'9"	1	–	–

OPENINGS:

NO.	TYPE	NAME	SILL.HT	SIZE	GF	FF	TF
1.	O1	OPENING	–	3'0"X7'0"	1	–	–
2.	O2	OPENING	–	4'0"XB.B	2	–	–

CLIENT:
MASONIC CHILDREN'S HOSPITAL

PROJECT NAME:
HOSPITAL AT COIMBATORE

DRAWING TITLE:
FIRST FLOOR – TILE DETAIL

DATE	DWG NO.	DRAWN BY
29.07.22	A2:01	DOREEN S.
SCALE	PROJ CODE	CHECKED BY
1"=8'0"	COM–202–2020	ARUN P.

N

ARUN AND ASSOCIATES
ARCHITECTS & PLANNERS
1289, TRICHY ROAD,
COIMBATORE – 641 018.

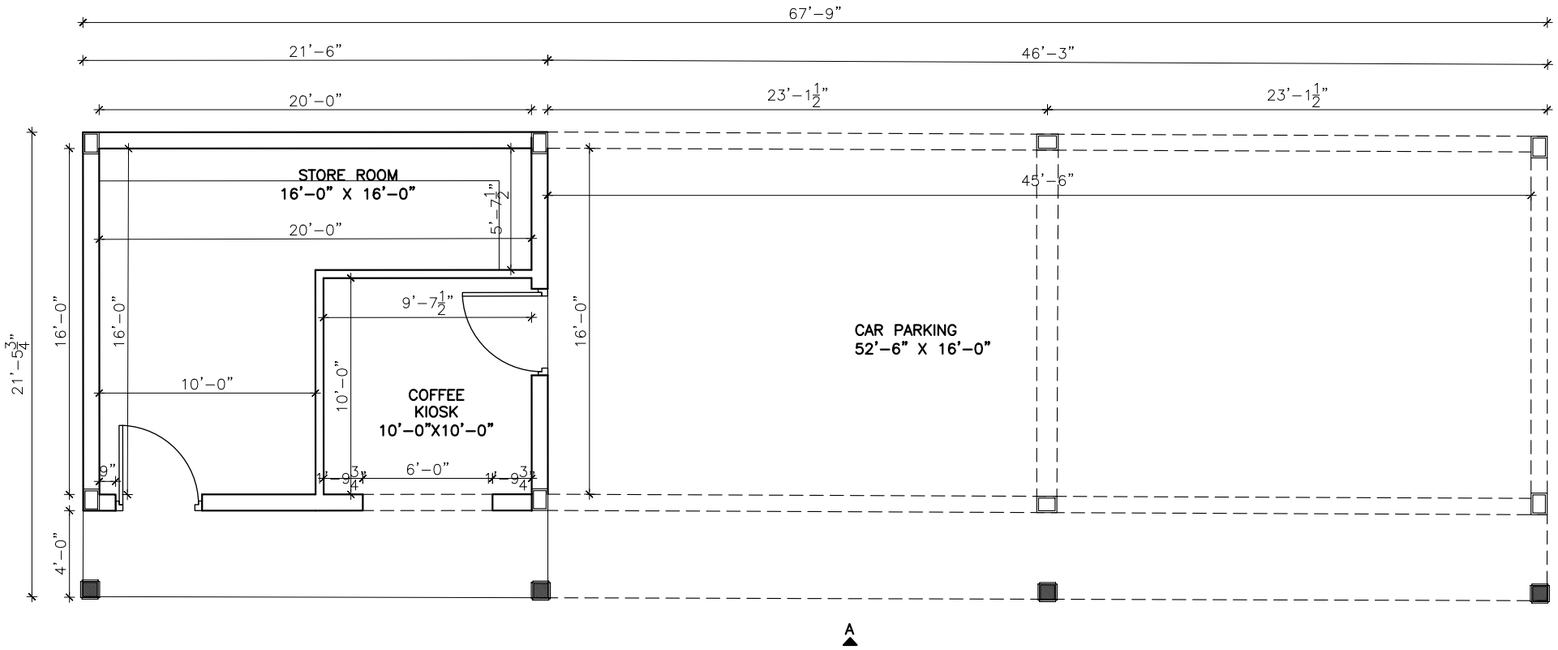

PART PLAN – STORE,COFFEE KISOK AND CAR PARKING

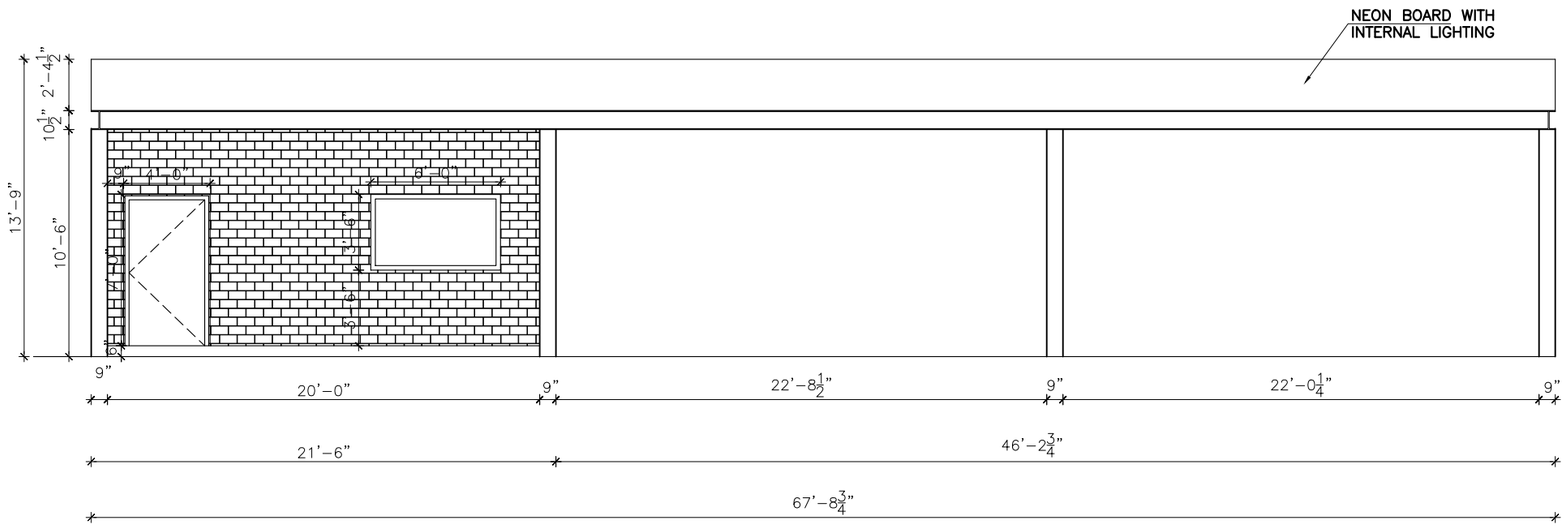

ELEVATION A

This drawing is the property of ARUN AND ASSOCIATES and shall not be passed on to any person not authorised by A&A to recieve it. It shall not be copied or modified in full or part without A&A's prior permission. The details furnished in this drg are for this PROJECT only.

REVISIONS:

NO.	DESCRIPTION	CHECKED	DATE
1.	REVISION 1	P.ARUN	25.04.22

CLIENT:
MASONIC CHILDREN'S HOSPITAL

PROJECT NAME:
HOSPITAL AT COIMBATORE

DRAWING TITLE:
STORE, COFFEE KIOSK AND CAR PARKING – ELEVATION

DATE	DWG NO.	DRAWN BY	N
14.09.22	A2:01	DOREEN S	
SCALE	PROJ CODE	CHECKED BY	
1"=8'0"	COM–202–2020	ARUN P.	

ARUN AND ASSOCIATES
ARCHITECTS & PLANNERS
1289, TRICHY ROAD,
COIMBATORE – 641 018.

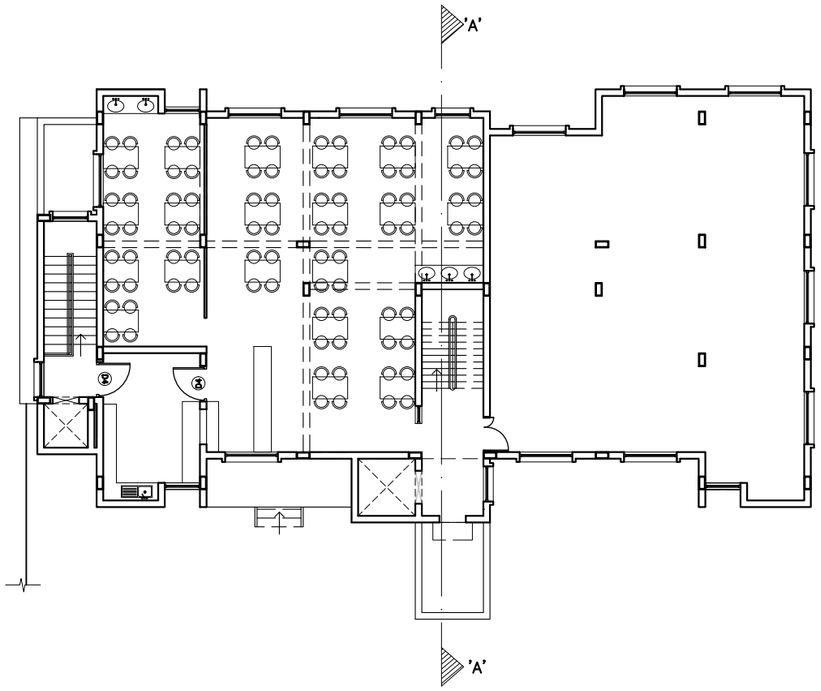

FIRST FLOOR PLAN (2:1)

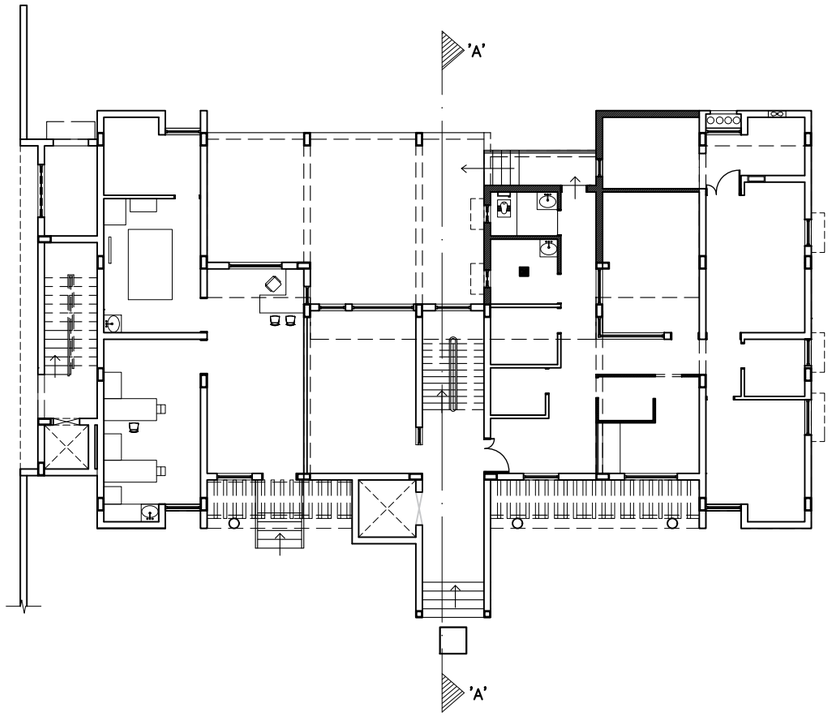

GROUND FLOOR PLAN (2:1)

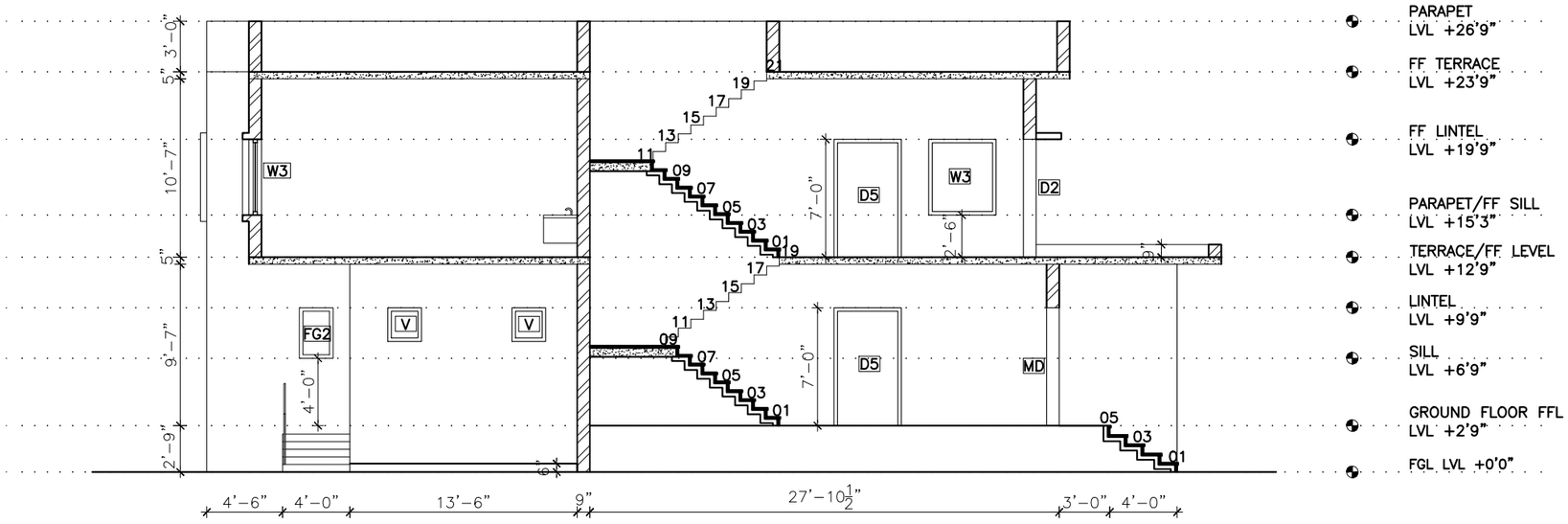

SECTION AA

This drawing is the property of ARUN AND ASSOCIATES (A&A) and shall not be passed on to any person not authorised by A&A to recieve it. It shall not be copied or modified in full or part without A&A's prior permission. The details furnished in this drawing are for this PROJECT only.

REVISIONS:

NO.	DESCRIPTION	CHECKED	DATE

CLIENT:
MASONIC HOSPITAL

PROJECT NAME:
HOSPITAL AT COIMBATORE

DRAWING TITLE:
SECTION DRAWING

DATE	DWG NO.	DRAWN BY
20.10.22	A2:01	DOREEN S.
SCALE	PROJ CODE	CHECKED BY
1"=6'0"		ARUN P.

ARUN AND ASSOCIATES
ARCHITECTS & PLANNERS
1289, TRICHY ROAD,
COIMBATORE – 641 018.

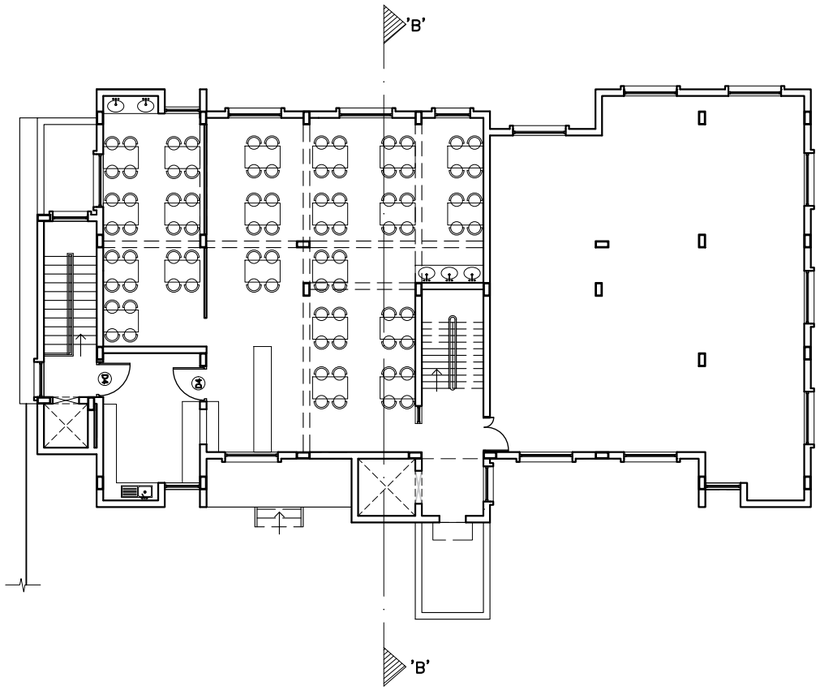

FIRST FLOOR PLAN (2:1)

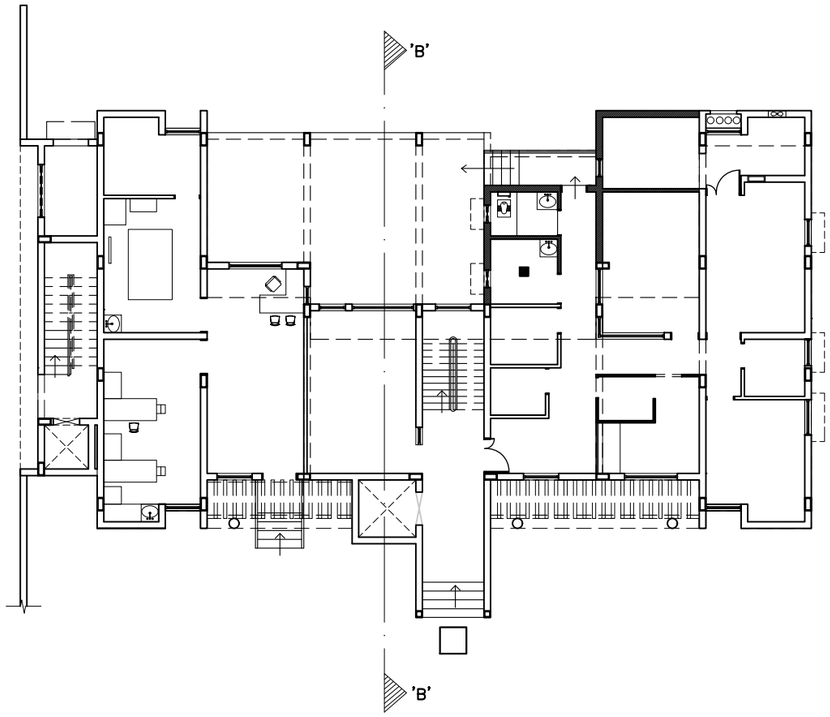

GROUND FLOOR PLAN (2:1)

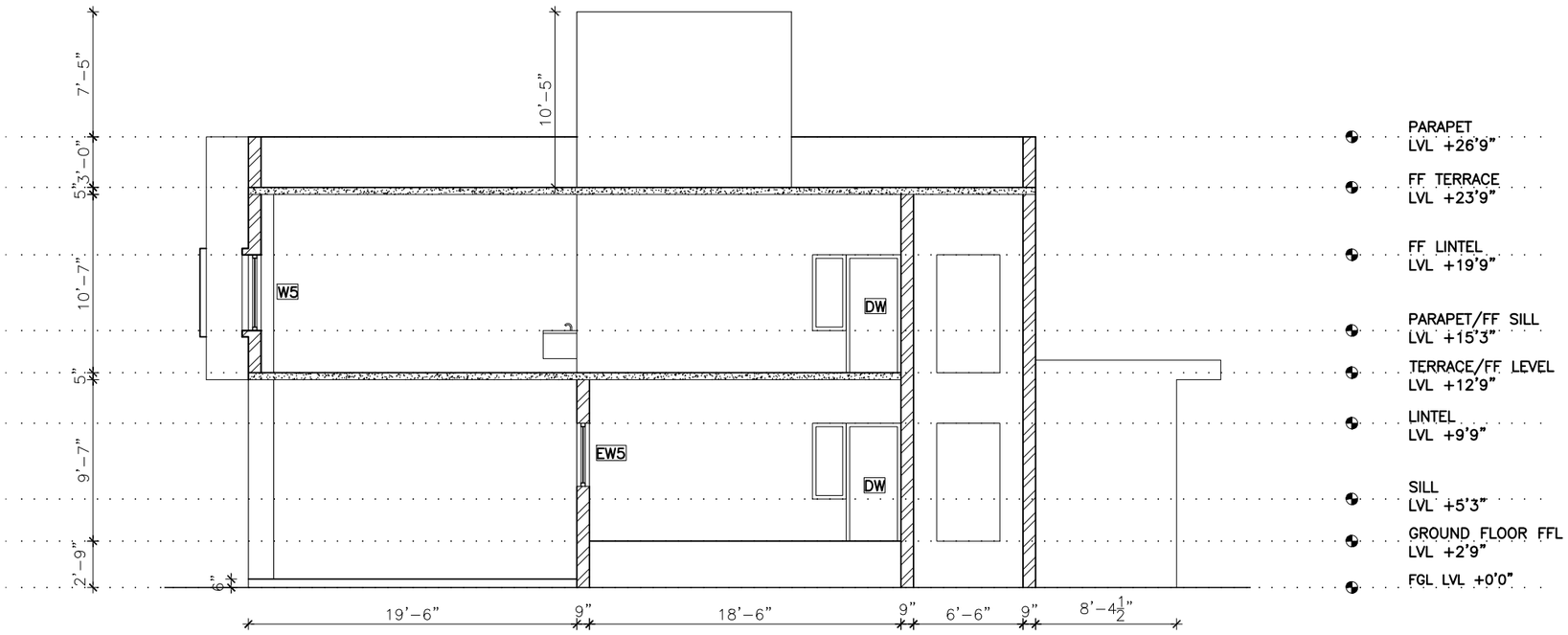

SECTION BB

This drawing is the property of ARUN AND ASSOCIATES (A&A) and shall not be passed on to any person not authorised by A&A to recieve it. It shall not be copied or modified in full or part without A&A's prior permission. The details furnished in this drawing are for this PROJECT only.

REVISIONS:

NO.	DESCRIPTION	CHECKED	DATE

CLIENT:
MASONIC HOSPITAL

PROJECT NAME:
HOSPITAL AT COIMBATORE

DRAWING TITLE:
SECTION DRAWING

DATE	DWG NO.	DRAWN BY
25.10.22	A2:01	DOREEN S.
SCALE	PROJ CODE	CHECKED BY
1"=6'0"		ARUN P.

ARUN AND ASSOCIATES
ARCHITECTS & PLANNERS
1289, TRICHY ROAD,
COIMBATORE – 641 018.

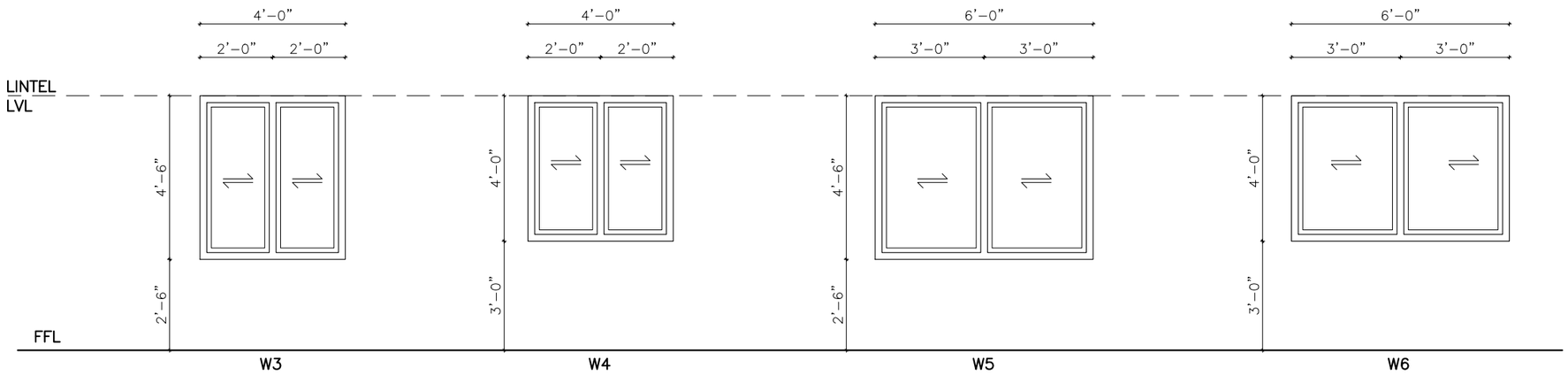

WINDOW
4'0"X4'6" (6 NOS)
(LIFT LOBBY–02
STAIRCASE LANDING–01
DOCTOR'S DINING–01
STAFF DINING–01
OPEN HALL–01)
WITH GRILL

WINDOW
4'0"X4'0" (1 NO)
(PANTRY–01)
WITH GRILL

WINDOW
6'0"X4'6" (11 NOS)
(STAFF DINING–03
OPEN HALL–08)
WITH GRILL

WINDOW
6'0"X4'0" (1 NO)
(STAFF DINING–01)
WITH GRILL

WINDOW DETAIL

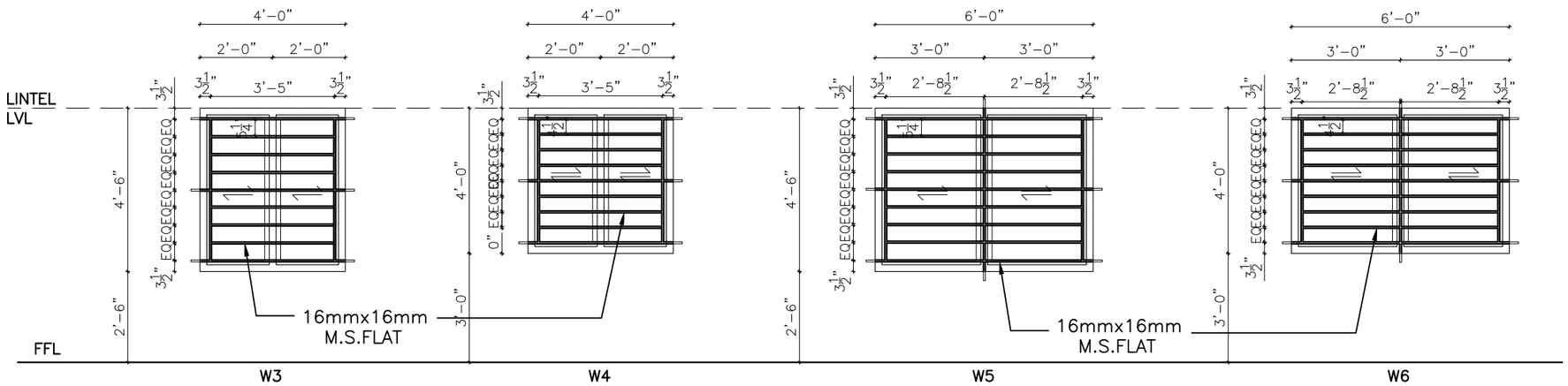

WINDOW
4'0"X4'6" (6 NOS)
(LIFT LOBBY–02
STAIRCASE LANDING–01
DOCTOR'S DINING–01
STAFF DINING–01
OPEN HALL–01)
WITH GRILL

WINDOW
4'0"X4'0" (1 NO)
(PANTRY–01)
WITH GRILL

WINDOW
6'0"X4'6" (11 NOS)
(STAFF DINING–03
OPEN HALL–08)
WITH GRILL

WINDOW
6'0"X4'0" (1 NO)
(STAFF DINING–01)
WITH GRILL

WINDOW GRILL DETAIL

This drawing is the property of ARUN AND ASSOCIATES (A&A) and shall not be passed on to any person not authorised by A&A to recieve it. It shall not be copied or modified in full or part without A&A's prior permission. The details furnished in this drawing are for this PROJECT only.

JOINERY DETAILS:

WINDOWS:

NO.	TYPE	NAME	SILL.HT	SIZE	FF
1.	W1	WINDOW	4'0"	3'0"X3'0"	0
2.	W2	WINDOW	4'0"	4'0"X3'0"	0
3.	W3	WINDOW	2'6"	4'0"X4'6"	6
4.	W4	WINDOW	3'0"	4'0"X4'0"	1
5.	W5	WINDOW	2'6"	6'0"X4'6"	11
6.	W6	WINDOW	3'0"	6'0"X4'0"	1

CLIENT:
MASONIC CHILDREN'S HOSPITAL

PROJECT NAME:
HOSPITAL AT COIMBATORE

DRAWING TITLE:
UPVC WINDOW AND GRILL DETAIL

DATE	DWG NO.	DRAWN BY
27.07.22	A2:01	DOREEN S.
SCALE	PROJ CODE	CHECKED BY
1"=8'0"	COM–202–2020	–

N

ARUN AND ASSOCIATES
ARCHITECTS & PLANNERS
1289, TRICHY ROAD,
COIMBATORE – 641 018.

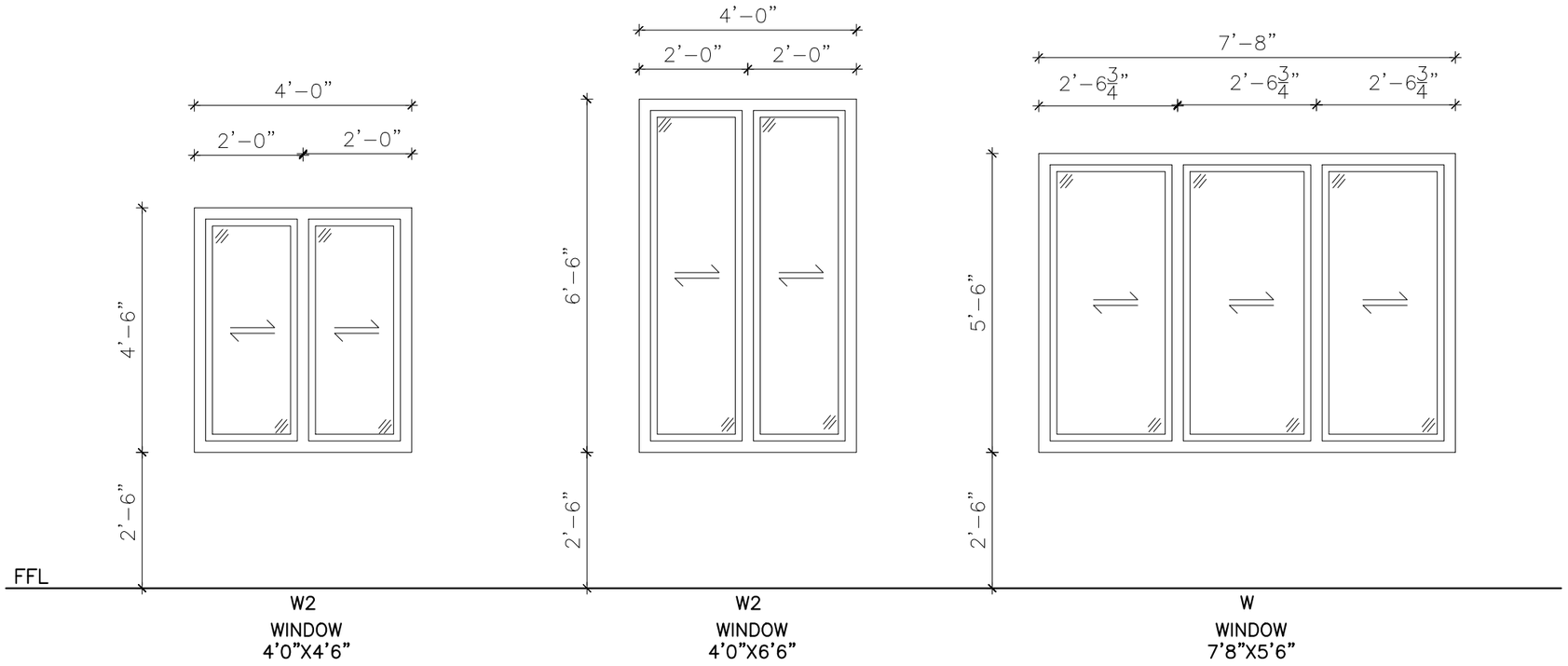

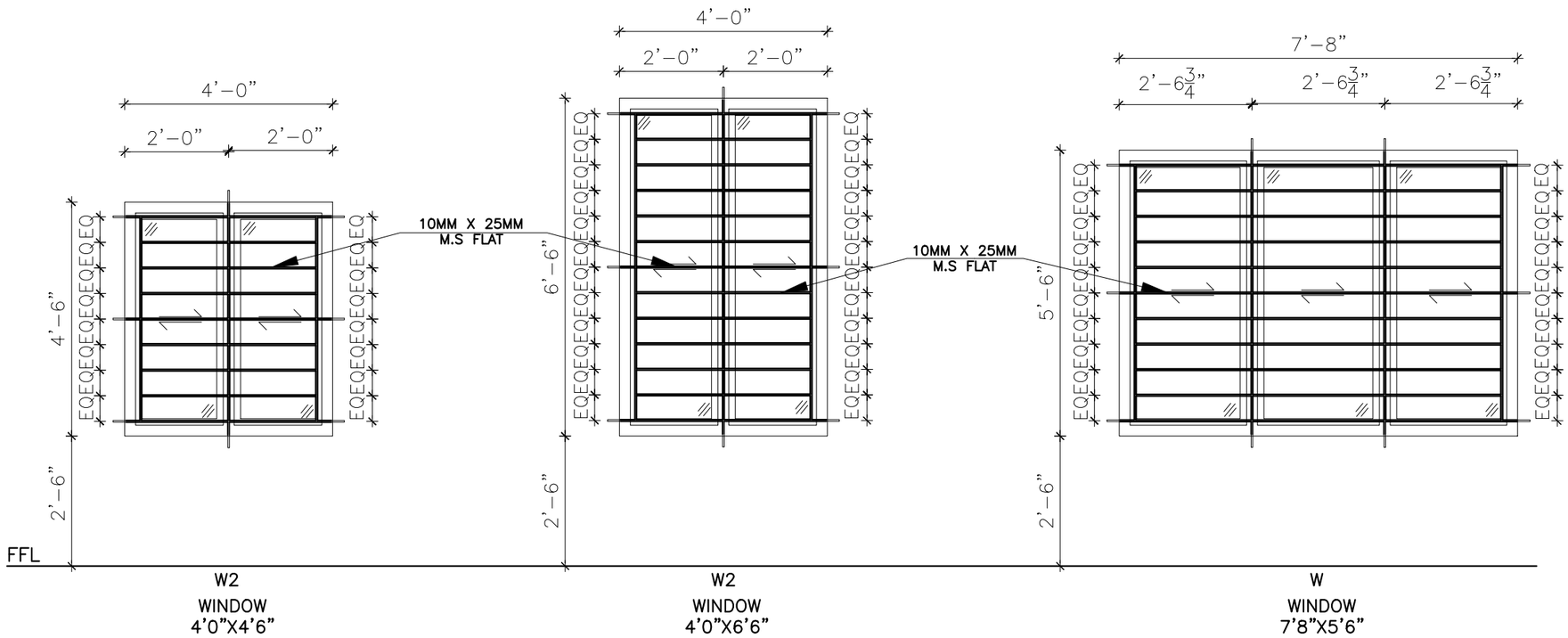

This drawing is the property of ARUN AND ASSOCIATES (A&A) and shall not be passed on to any person not authorised by A&A to recieve it. It shall not be copied or modified in full or part without A&A's prior permission. The details furnished in this drawing are for this PROJECT only.

JOINERY DETAILS:

WINDOWS:

NO.	TYPE	NAME	SILL.HT	SIZE
1.	W2	WINDOW	2'6"	4'0"X4'6"
2.	W2	WINDOW	2'6"	4'0"X6'6"
3.	W	WINDOW	2'6"	7'8"X5'6"

*UPVC WINDOW FRAMES COLOUR IS WHITE AND SLIDING SYSTEM

*ALL UPVC WINDOWS TO BE PROVIDED WITH MOSQUITO MESH

* MS GRILL TO BE FINISHED WITH WHITE MATT ENAMEL PAINT

*ALL WINDOW DOOR JAMBS TO BE FINISHED WITH GRANITE
– DARK MINT PEARL GRANITE TO BE USED

6MM TK PLAIN GLASS

CLIENT:
MASONIC CHILDREN'S HOSPITAL

PROJECT NAME:
HOSPITAL AT COIMBATORE

DRAWING TITLE:
UPVC WINDOW AND GRILL DETAIL B BLOCK

DATE	DWG NO.	DRAWN BY	N
10.08.22	A2:01	DOREEN S.	
SCALE	PROJ CODE	CHECKED BY	
1"=8'0"	COM-202-2020	–	

ARUN AND ASSOCIATES
ARCHITECTS & PLANNERS
1289, TRICHY ROAD,
COIMBATORE – 641 018.

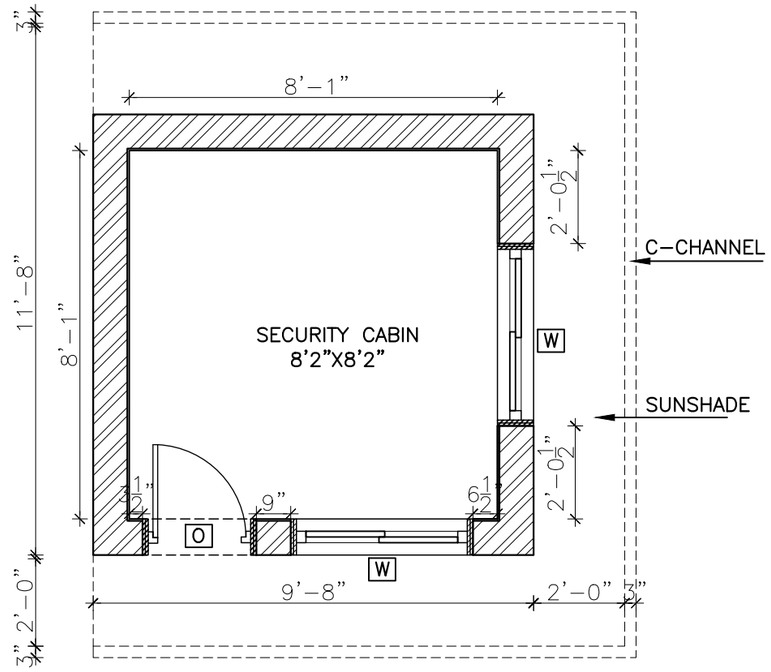

PLAN – SECURITY CABIN

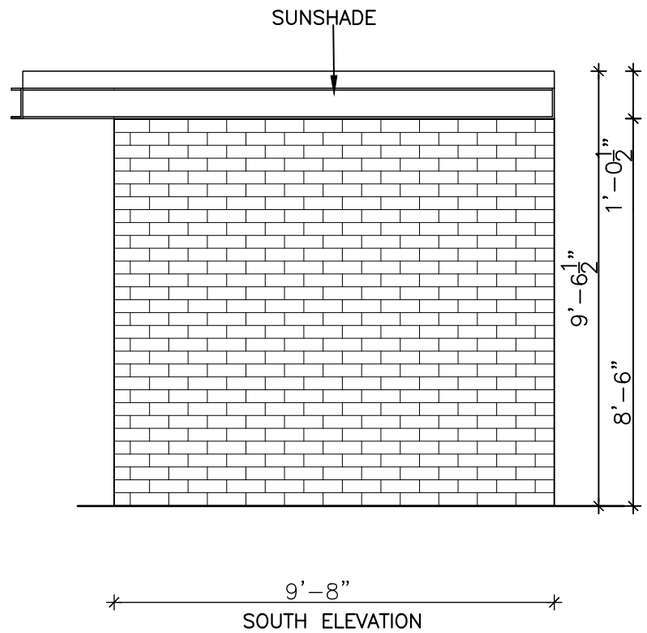

SOUTH ELEVATION

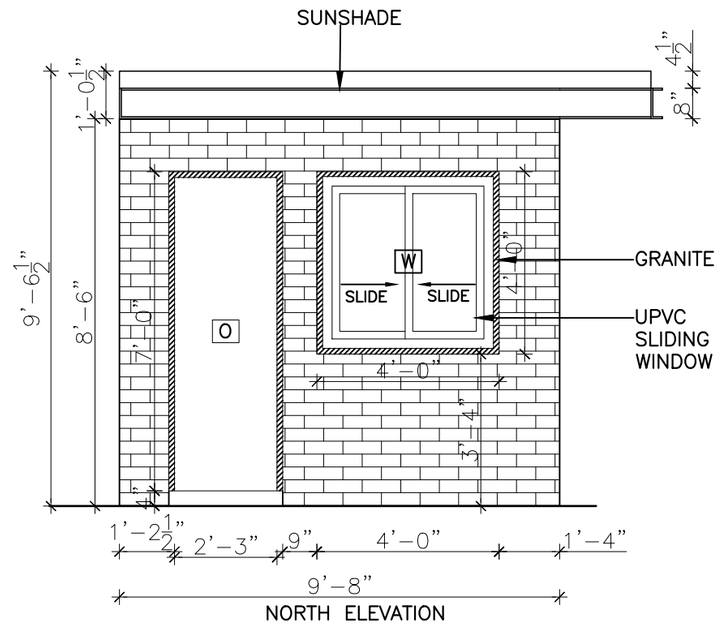

NORTH ELEVATION

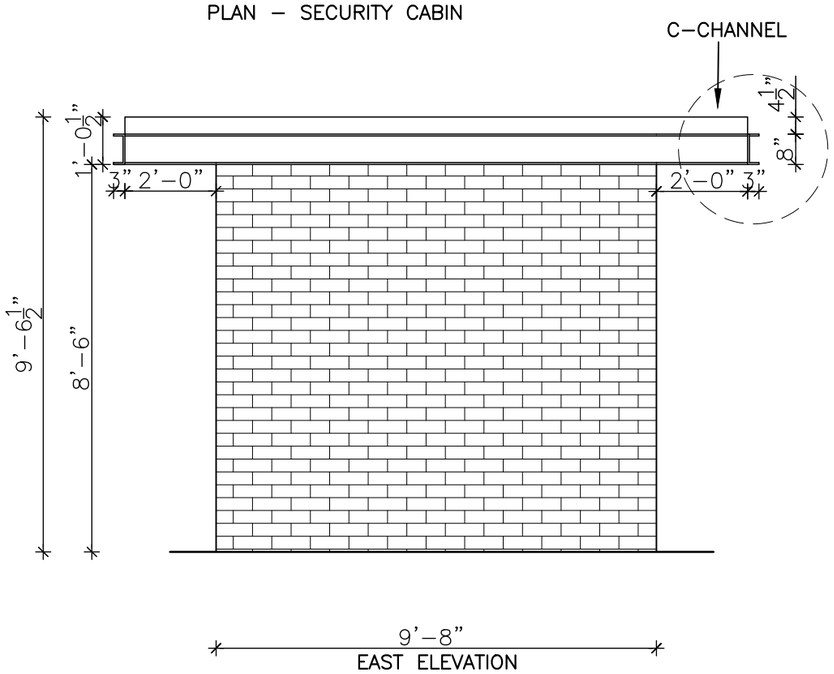

EAST ELEVATION

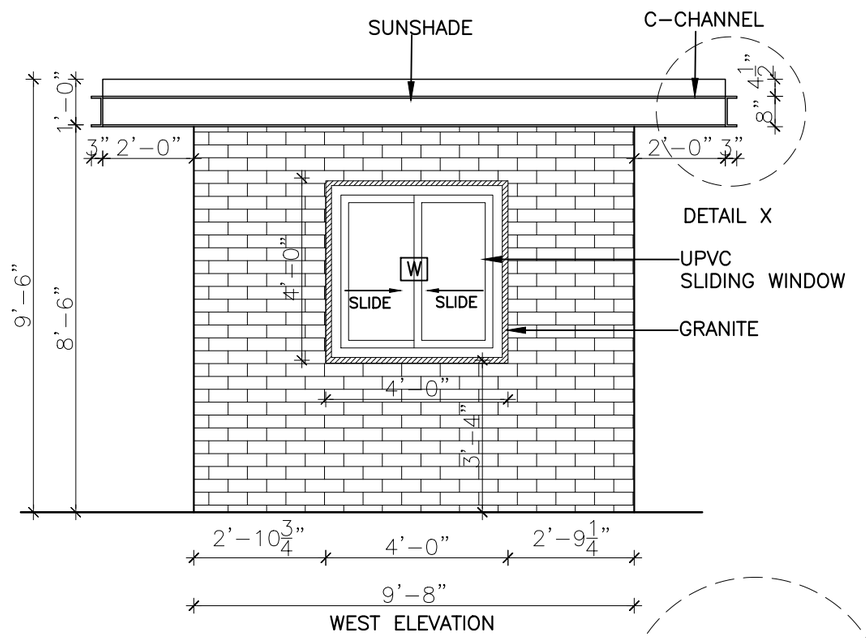

WEST ELEVATION

GRANITE

BRICK

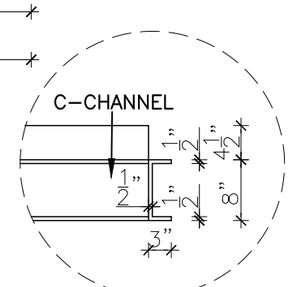

DETAIL X

REVISIONS:			
NO.	DESCRIPTION	CHECKED	DATE

CLIENT:
MASONIC CHILDREN'S HOSPITAL

PROJECT NAME:
HOSPITAL AT COIMBATORE

DRAWING TITLE:
SECURITY CABIN DETAIL

DATE	DWG NO.	DRAWN BY	
16.06.22	A2:01	DOREEN S.	
SCALE	PROJ CODE	CHECKED BY	
1"=4'0"	COM-202-2020	ARUN P.	N

ARUN AND ASSOCIATES
ARCHITECTS & PLANNERS
1289, TRICHY ROAD,
COIMBATORE – 641 018.

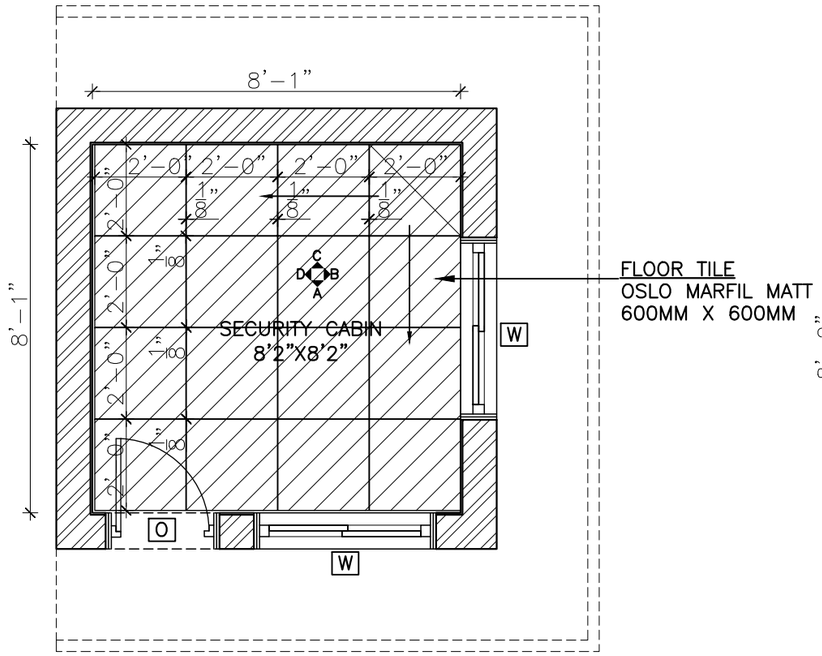

PLAN – SECURITY CABIN

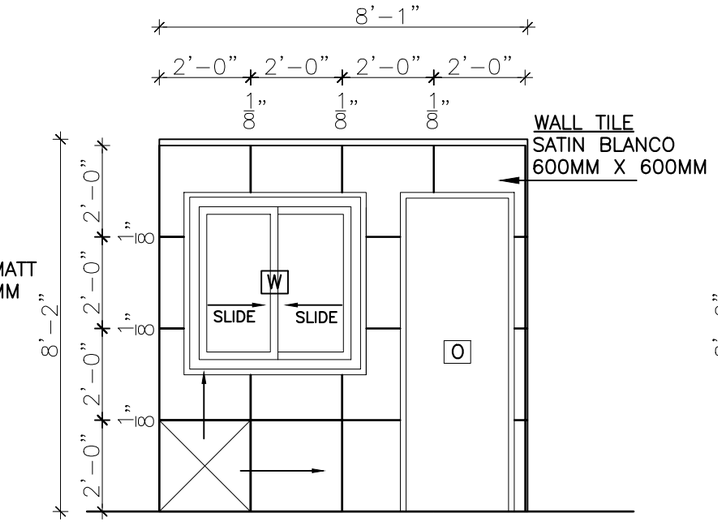

ELEVATION – A

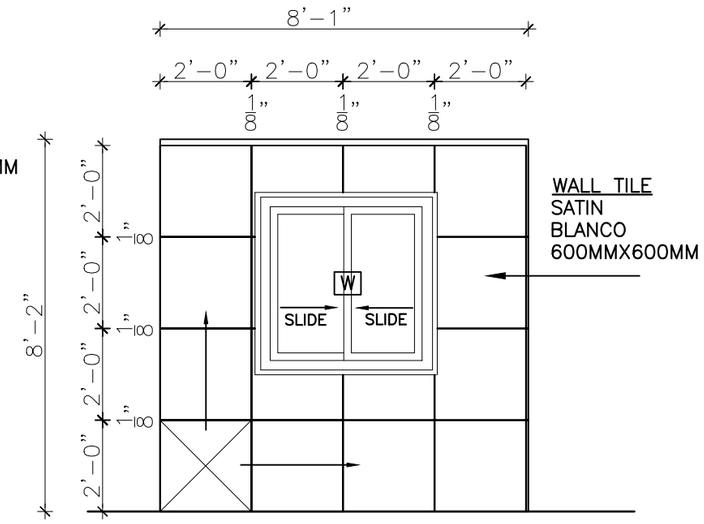

ELEVATION – B

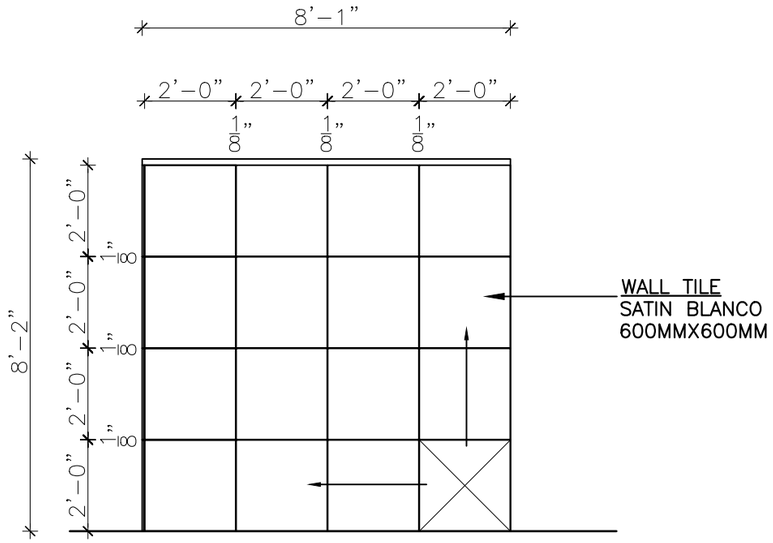

ELEVATION – C

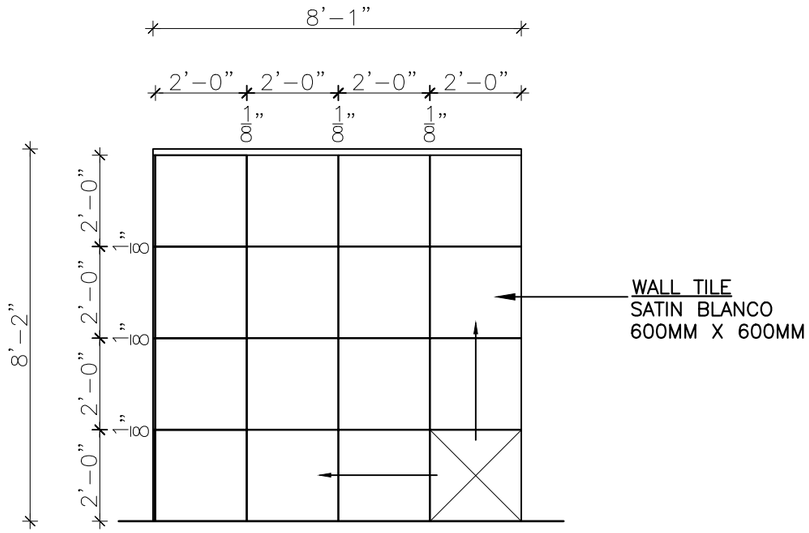

ELEVATION – D

FLOOR TILE : KAJARIA – THE STAR
OSLO MARFIL MATT (600MM X 600MM)

WALL TILE : KAJARIA – THE STAR
SATIN BLANCO MATT (600MM X 600MM)

REVISIONS:

NO.	DESCRIPTION	CHECKED	DATE

CLIENT:
MASONIC CHILDREN'S HOSPITAL

PROJECT NAME:
HOSPITAL AT COIMBATORE

DRAWING TITLE:
SECURITY CABIN–TILE DETAIL

DATE	DWG NO.	DRAWN BY
16.06.22	A2:01	DOREEN S.
SCALE	PROJ CODE	CHECKED BY
1"=4'0"	COM–202–2020	ARUN P.

N

ARUN AND ASSOCIATES
ARCHITECTS & PLANNERS
1289, TRICHY ROAD,
COIMBATORE – 641 018.

PRACTICAL TRAINING

JUNE 2022 - NOVEMBER 2022

MR. MANOGAR

RESIDENCE AT COIMBATORE

NAME : DOREEN GRACE SANTHOSH

REG NO : 39210021

ARUN & ASSOCIATES

1289,TRICHY ROAD,COIMBATORE-640018.

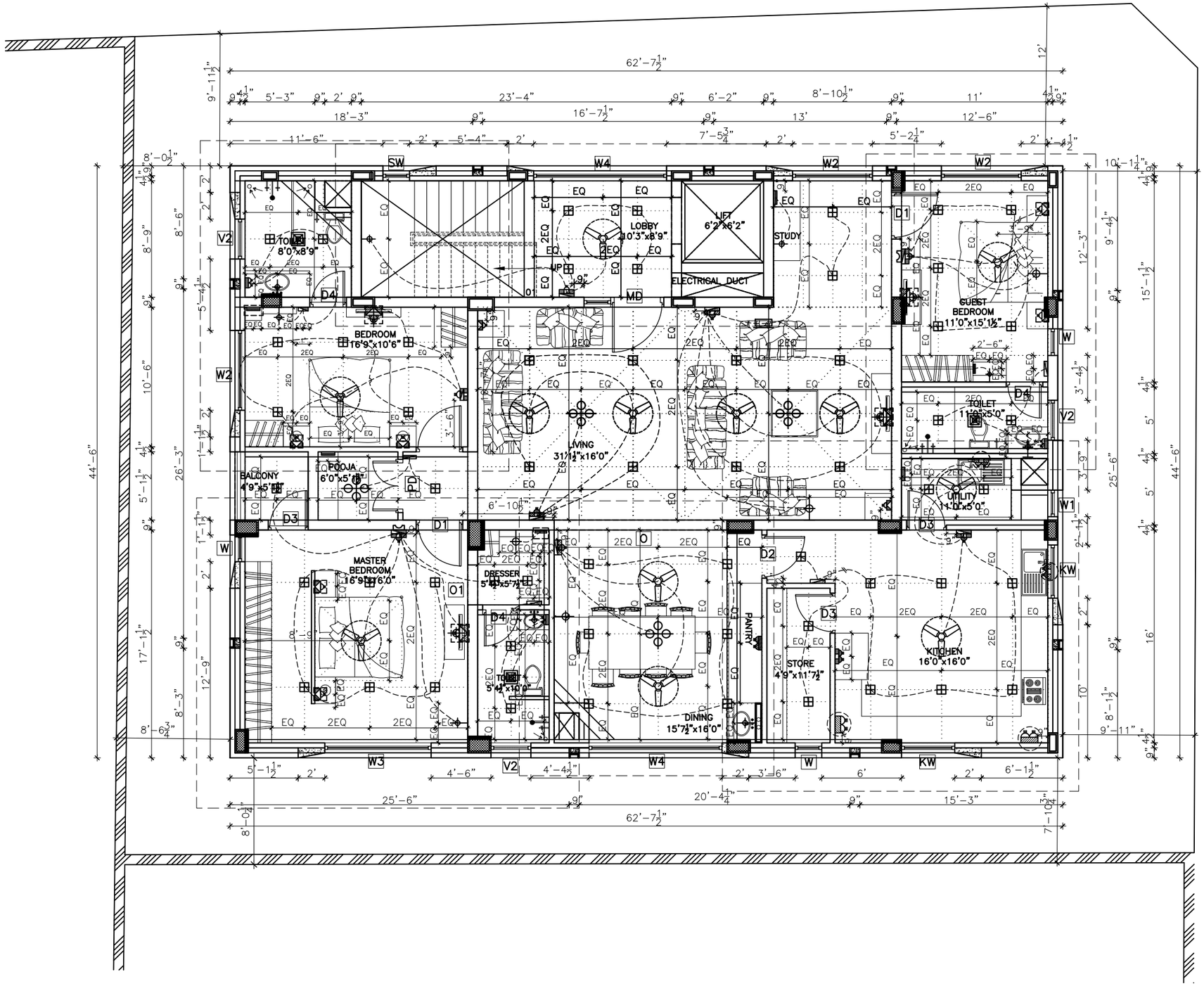

This drawing is the property of ARUN AND ASSOCIATES (A&A) and shall not be passed on to any person not authorised by A&A to recieve it. It shall not be copied or modified in full or part without A&A's prior permission. The details furnished in this drawing are for this PROJECT only.

TOTAL AREA – 2706.95
COMMON AREA – 287.3
BUILT AREA – 2418.7

STAIRCASE DETAILS:

STILT FLOOR FFL TO FIRST FLOOR
FFL = 9'–6"
NO. OF STEPS =19; TREAD =11" ; RISER = 5¾"

FIRST FLOOR FFL TO TYPICAL
FLOOR FFL = 10'–9"
NO. OF STEPS =21; TREAD =11" ; RISER = 6¼"

As per approval 3m(10 ft) setback required along the roadside.
As per approval 2.5m(8ft 3inc) setback required along the other two sides.

JOINERY DETAIL :

S.NO	TYPE	SIZE	SILL Lvl	NO.						
				SF	1F	2F	3F	4F	ANC.	TOT
DOORS										
01.	MD	6'0"x9'0"	–	–	1	1	1	1	1	5
02.	PD	4'0"x9'0"		–	1	1	1	1	–	4
03.	D1	3'6"x9'0"	–	–	3	3	3	3	3	15
04.	D2	3'3"x9'0"	–	–	1	1	1	1	–	4
05.	D3	3'0"x8'0"	–	–	3	3	3	3	–	12
06.	D4	2'9"x8'0"	–	2	3	3	3	3	2	16
WINDOW										
07.	W	2'0"x5'6"	2'6"	–	3	3	3	3	–	12
08.	W1	2'0"x4'4"	3'8"	–	1	1	1	1	–	4
09.	W2	6'0"x5'6"	2'6"	–	3	3	3	3	1	13
10.	W3	8'0"x5'6"	2'6"	–	1	1	1	1	1	5
11.	W4	10'0"x5'6"	2'6"	–	2	2	2	2	1	9
12.	FW	10'0"xB.B	9"	1	–	–	–	–	–	1
13.	KW	4'0"x4'4"	3'8"	–	2	2	2	2	–	8
14.	SW	2'0"x5'6"	2'6"	–	1	–	1	1	–	3
VENTILATOR										
15.	V	2'0"x4'0"	4'0"	2	–	–	–	–	–	2
16.	V1	3'0"x4'4"	3'8"	–	–	–	1	1	–	2
17.	V2	3'0"x5'6"	2'6"	–	3	3	2	2	2	12
OPENING										
18.	O	13'0"xC.B	–	–	1	1	1	1	–	4
19.	O1	3'0"xC.B	–	–	1	1	1	1	–	4

REVISIONS:

NO.	DESCRIPTION	CHECKED	DATE
1.	REVISION 1 – LEVELS	P.ARUN	07.03.22

CLIENT:
MR.MANOGAR

PROJECT NAME:
RESIDENCE AT COIMBATORE

DRAWING TITLE:
TYPICAL FLOOR PLAN–1 & 2–ELECTRICAL LAYOUT

DATE	DWG NO.	DRAWN BY
27.07.22	A2:01	DOREEN S.
SCALE	PROJ CODE	CHECKED BY
1"=16'0"		ARUN P.

N

ARUN AND ASSOCIATES
ARCHITECTS & PLANNERS
1289, TRICHY ROAD,
COIMBATORE – 641 018.

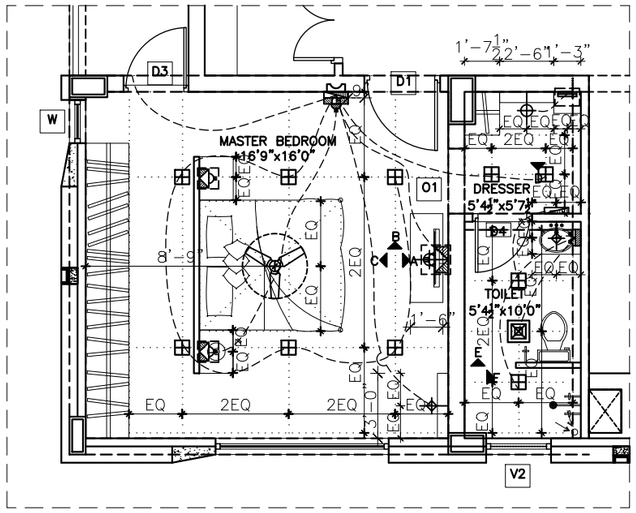

PART PLAN : MASTER BEDROOM,DRESSER,TOILET

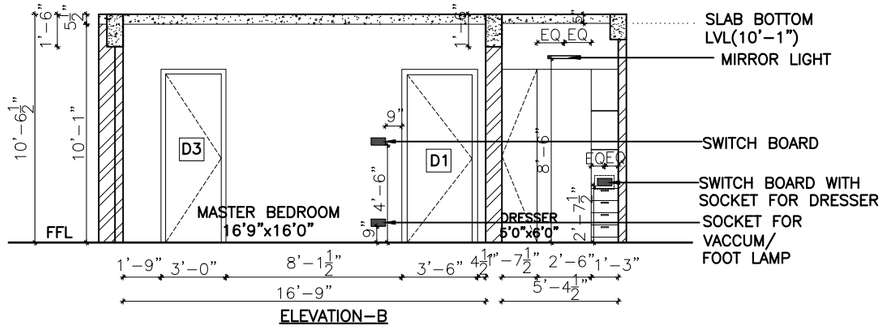

ELEVATION-B

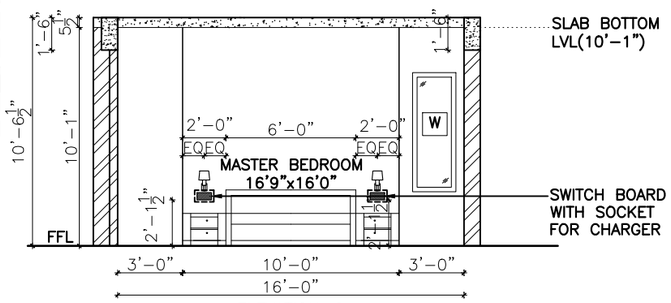

ELEVATION-C

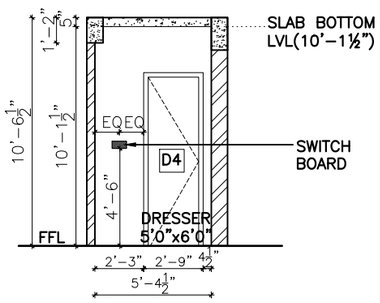

ELEVATION-D

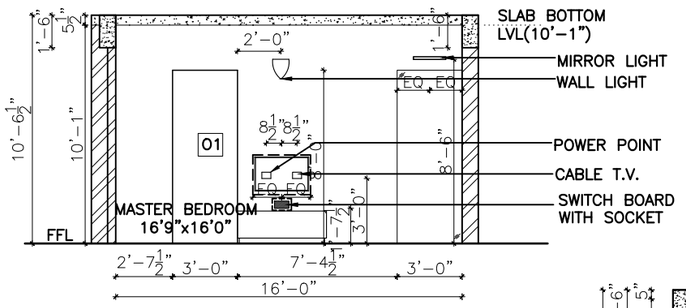

ELEVATION-A

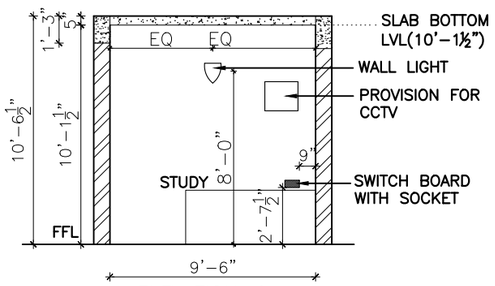

ELEVATION-G

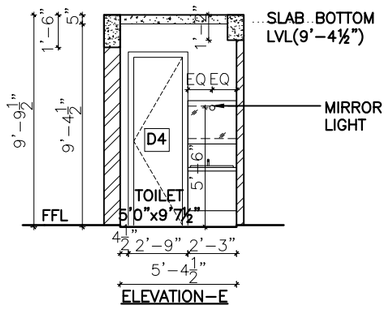

ELEVATION-E

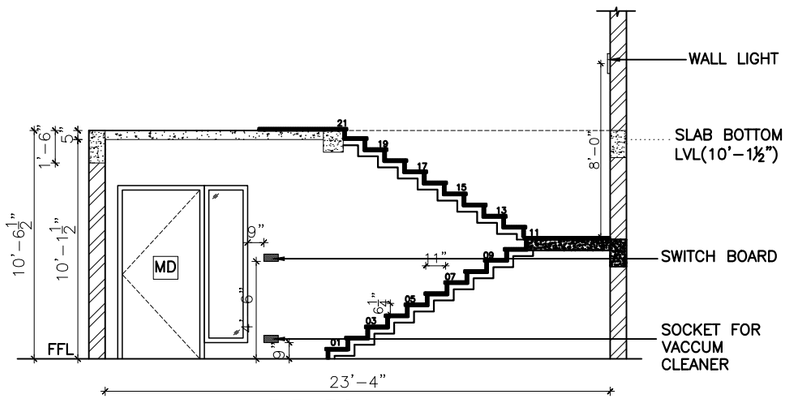

ELEVATION-H

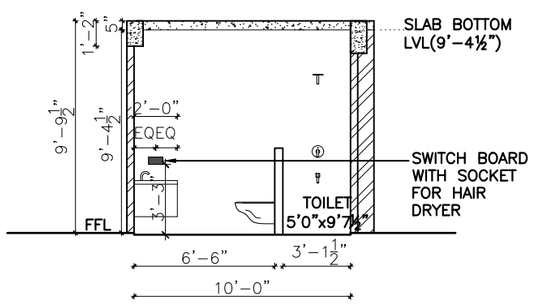

ELEVATION-F

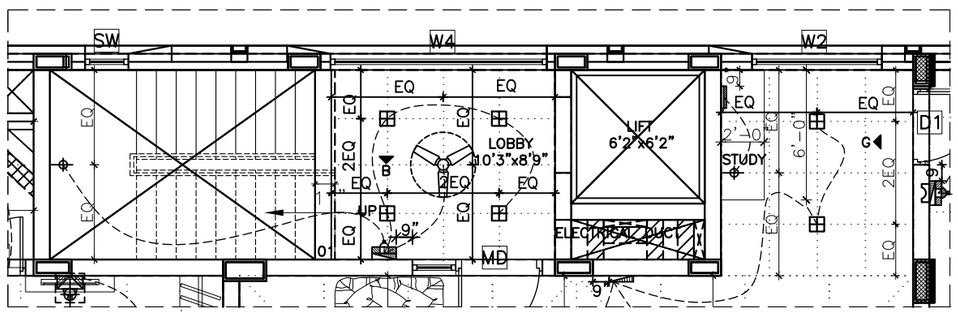

PART PLAN : LOBBY, STUDY

This drawing is the property of ARUN AND ASSOCIATES (A&A) and shall not be passed on to any person not authorised by A&A to recieve it. It shall not be copied or modified in full or part without A&A's prior permission. The details furnished in this drawing are for this PROJECT only.

ELECTRICAL FITTINGS DETAIL:

NO	SYMBOL	DESCRIPTION
01		SWITCH BOARD AT 4'6" FROM F.F.L TO THE BOTTOM OF SWITCH PLATE
02		SWITCH BOARD AT 3'3" FROM F.F.L TO THE BOTTOM OF SWITCH PLATE
03		SWITCH BOARD AT 7'3" FROM F.F.L TO THE BOTTOM OF SWITCH PLATE
04		SWITCH BOARD AT 2'7½" FROM F.F.L TO THE BOTTOM OF SWITCH PLATE
05		SWITCH BOARD AT 1'7½" FROM F.F.L TO THE BOTTOM OF SWITCH PLATE
06		SWITCH BOARD AT 0'9" FROM F.F.L TO THE BOTTOM OF SWITCH PLATE
07		FOOT LAMP 9" FROM F.F.L TO THE BOTTOM OF THE LAMP PLATE
08		6 A SHUTTER TYPE SOCKET WITH SWITCH
09		6/16 A SHUTTER TYPE SOCKET WITH SWITCH
10		GEYSER SWITCH
11		WALL BRACKET LIGHT
12		MIRROR LIGHT
13		PEDESTAL FAN
14		FLUORESCENT TUBE LIGHT
15		CEILING FLUSH TYPE LIGHT FITTING
16		CEILING FAN
17		EXHAUST FAN
18		COVE LIGHT
19		BELL
20		BELL PUSH
21		TELEPHONE
22		DISTRIBUTION BOARD
23		U.P.S.
24		METERING BOARD
25		EARTH POINT
26		EMERGENCY SWITCH
27		GEYSER
28		ONE WAY SWITCH
29		TWO WAY SWITCH
30		CASSETTE AIRCONDITIONER
31		ELECTRIC CHIMNEY SWITCH
32		TELEVISION
33		SPLIT AIR-CONDITIONER
34		OHT AUTOMATIC WATER LVL CONTROLLER
35		DECORATIVE MULTI-BULB LIGHT FITTING

POSITION TO BE DECIDED DURING DADOING

POSITION TO BE DECIDED DURING INTERIOR CARPENTRY

POSITION TO BE DECIDED DURING LANDSCAPING

REVISIONS:

NO.	DESCRIPTION	CHECKED	DATE

CLIENT:
MR.MANOGAR

PROJECT NAME:
RESIDENCE AT COIMBATORE

DRAWING TITLE:
ELECTRICAL ELEVATION-MASTER BEDROOM, DRESSER, TOILET, LOBBY, STUDY

DATE	DWG NO.	DRAWN BY
20.06.22	A2:01	DOREEN S.
SCALE	PROJ CODE	CHECKED BY
1"=6'0"		ARUN P.

ARUN AND ASSOCIATES
ARCHITECTS & PLANNERS
1289, TRICHY ROAD,
COIMBATORE - 641 018.

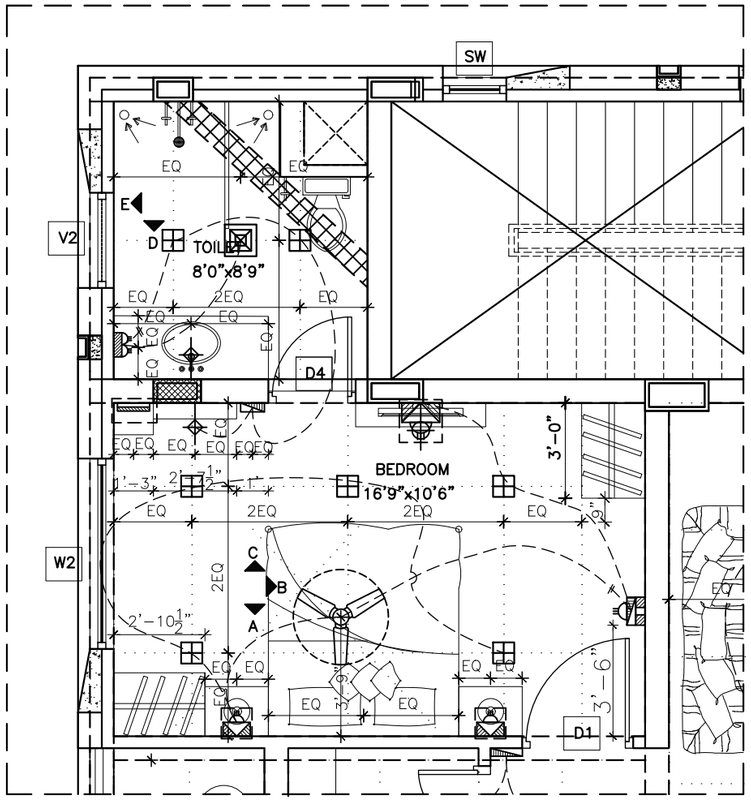

PART PLAN : BEDROOM, TOILET

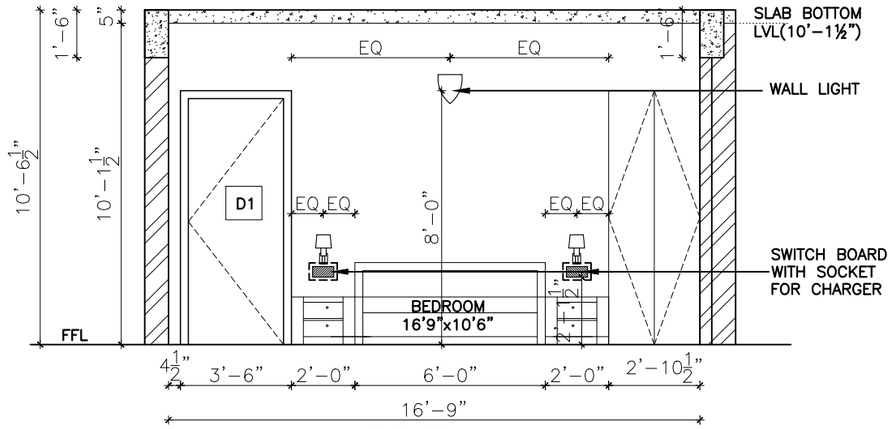

ELEVATION–A

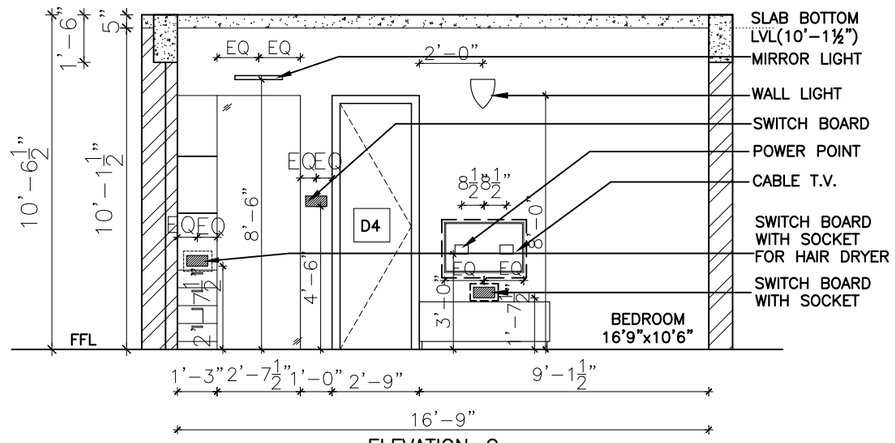

ELEVATION–C

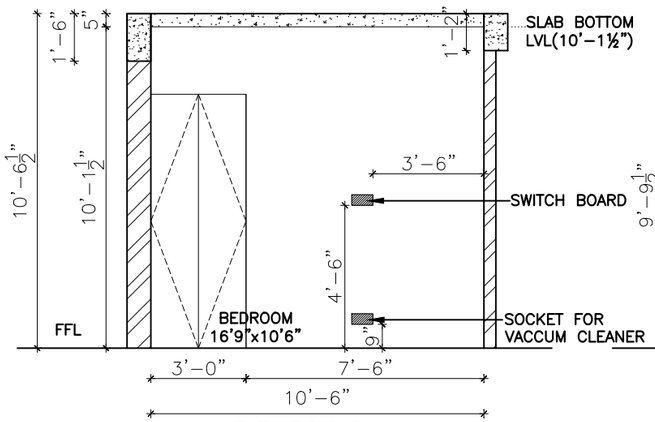

ELEVATION–B

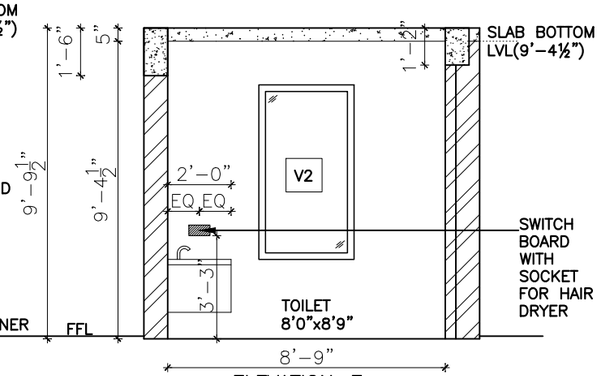

ELEVATION–E

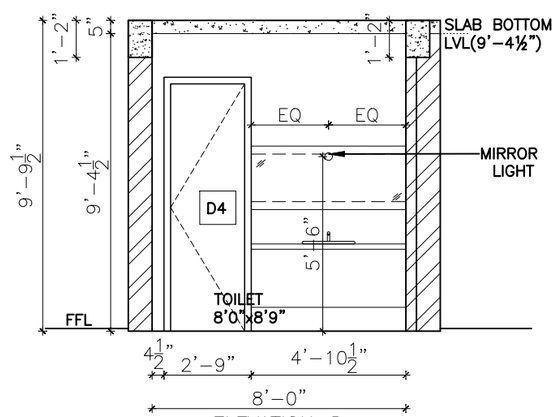

ELEVATION–D

This drawing is the property of ARUN AND ASSOCIATES (A&A) and shall not be passed on to any person not authorised by A&A to recieve it. It shall not be copied or modified in full or part without A&A's prior permission. The details furnished in this drawing are for this PROJECT only.

ELECTRICAL FITTINGS DETAIL:

NO	SYMBOL	DESCRIPTION
01		SWITCH BOARD AT 4'6" FROM F.F.L TO THE BOTTOM OF SWITCH PLATE
02		SWITCH BOARD AT 3'3" FROM F.F.L TO THE BOTTOM OF SWITCH PLATE
03		SWITCH BOARD AT 7'3" FROM F.F.L TO THE BOTTOM OF SWITCH PLATE
04		SWITCH BOARD AT 2'7½" FROM F.F.L TO THE BOTTOM OF SWITCH PLATE
05		SWITCH BOARD AT 1'7½" FROM F.F.L TO THE BOTTOM OF SWITCH PLATE
06		SWITCH BOARD AT 0'9" FROM F.F.L TO THE BOTTOM OF SWITCH PLATE
07		FOOT LAMP 9" FROM F.F.L TO THE BOTTOM OF THE LAMP PLATE
08		6 A SHUTTER TYPE SOCKET WITH SWITCH
09		6/16 A SHUTTER TYPE SOCKET WITH SWITCH
10		GEYSER SWITCH
11		WALL BRACKET LIGHT
12		MIRROR LIGHT
13		PEDESTAL FAN
14		FLUORESCENT TUBE LIGHT
15		CEILING FLUSH TYPE LIGHT FITTING
16		CEILING FAN
17		EXHAUST FAN
18		COVE LIGHT
19		BELL
20		BELL PUSH
21		TELEPHONE
22		DISTRIBUTION BOARD
23		U.P.S.
24		METERING BOARD
25		EARTH POINT
26		EMERGENCY SWITCH
27		GEYSER
28		ONE WAY SWITCH
29		TWO WAY SWITCH
30		CASSETTE AIRCONDITIONER
31		ELECTRIC CHIMNEY SWITCH
32		TELEVISION
33		SPLIT AIR–CONDITIONER
34		OHT AUTOMATIC WATER LVL CONTROLLER
35		DECORATIVE MULTI–BULB LIGHT FITTING

POSITION TO BE DECIDED DURING DADOING

POSITION TO BE DECIDED DURING INTERIOR CARPENTRY

POSITION TO BE DECIDED DURING LANDSCAPING

REVISIONS:

NO.	DESCRIPTION	CHECKED	DATE

CLIENT:
MR.MANOGAR

PROJECT NAME:
RESIDENCE AT COIMBATORE

DRAWING TITLE:
ELECTRICAL ELEVATION–BEDROOM,TOILET

DATE	DWG NO.	DRAWN BY
18.06.22	A2:01	DOREEN S.
SCALE	PROJ CODE	CHECKED BY
1"=6'0"		ARUN P.

ARUN AND ASSOCIATES
ARCHITECTS & PLANNERS
1289, TRICHY ROAD,
COIMBATORE – 641 018.

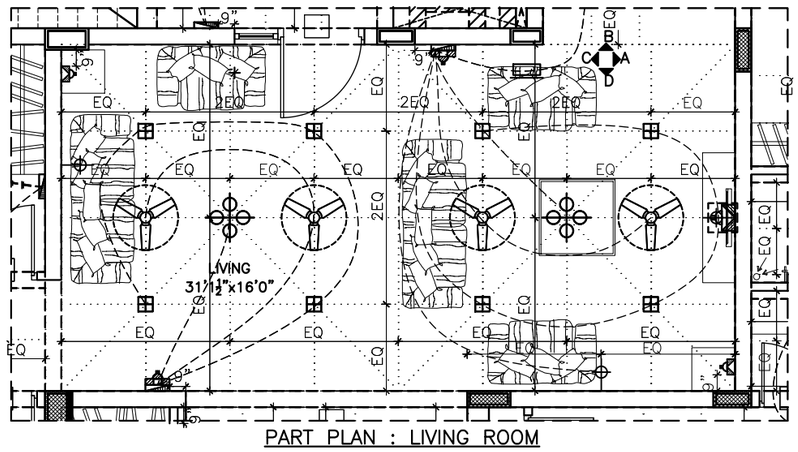

PART PLAN : LIVING ROOM

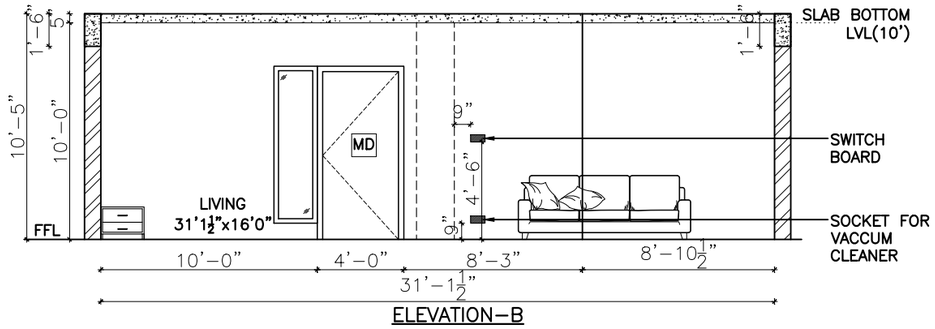

ELEVATION–B

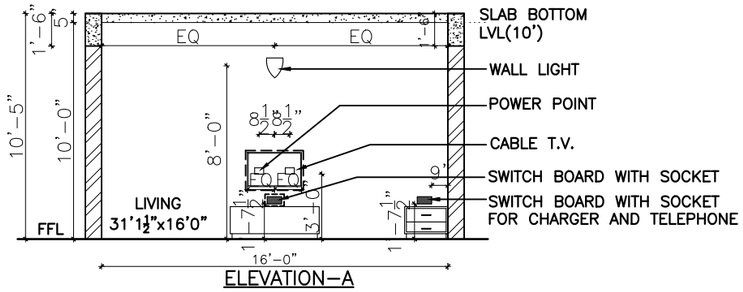

ELEVATION–A

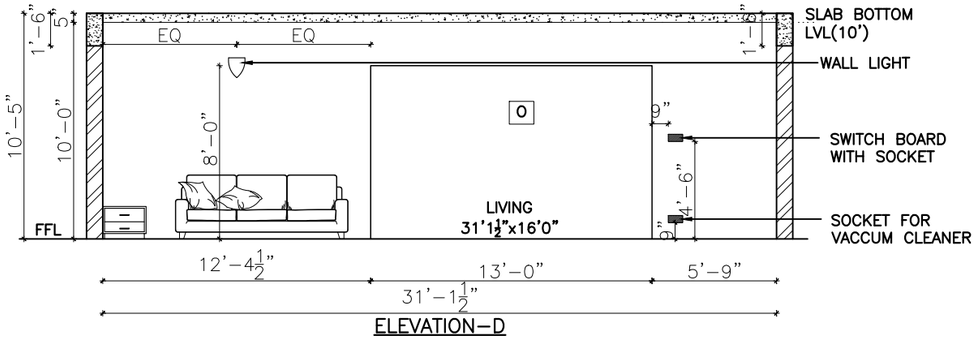

ELEVATION–D

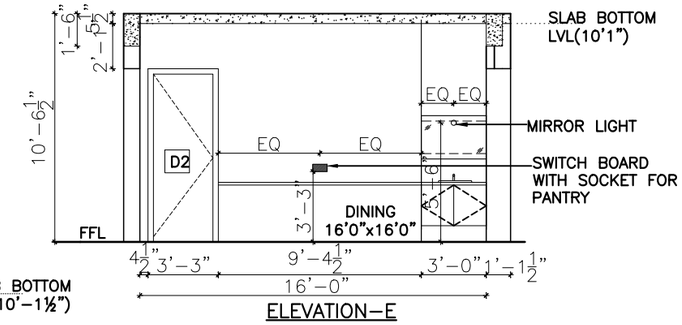

ELEVATION–E

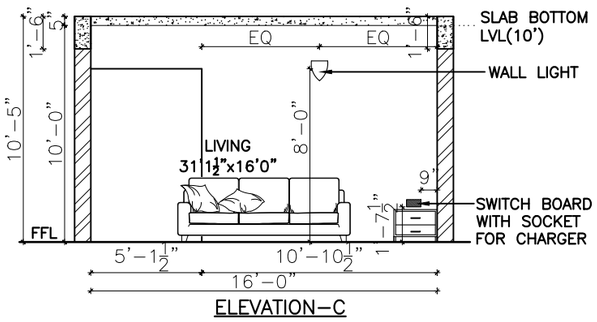

ELEVATION–C

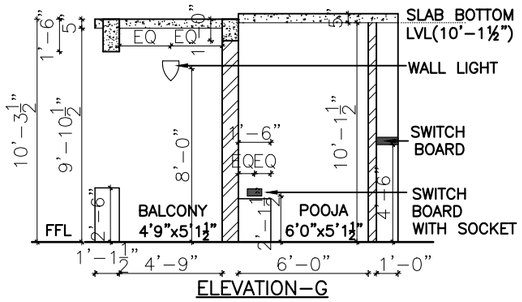

ELEVATION–G

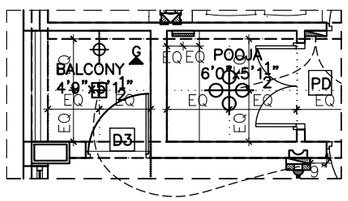

PART PLAN : BALCONY, POOJA

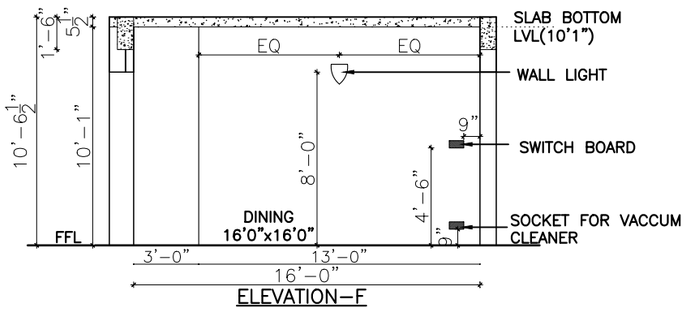

ELEVATION–F

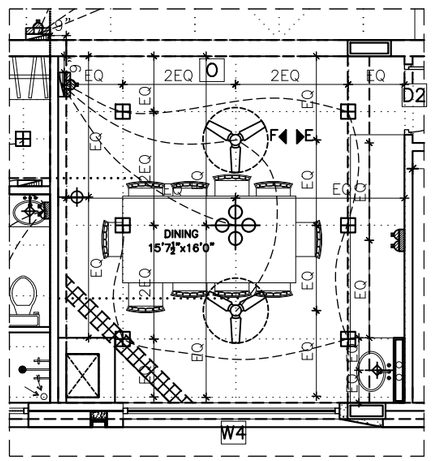

PART PLAN : DINING

This drawing is the property of ARUN AND ASSOCIATES (A&A) and shall not be passed on to any person not authorised by A&A to recieve it. It shall not be copied or modified in full or part without A&A's prior permission. The details furnished in this drawing are for this PROJECT only.

ELECTRICAL FITTINGS DETAIL:

NO	SYMBOL	DESCRIPTION
01		SWITCH BOARD AT 4'6" FROM F.F.L TO THE BOTTOM OF SWITCH PLATE
02		SWITCH BOARD AT 3'3" FROM F.F.L TO THE BOTTOM OF SWITCH PLATE
03		SWITCH BOARD AT 7'3" FROM F.F.L TO THE BOTTOM OF SWITCH PLATE
04		SWITCH BOARD AT 2'7½" FROM F.F.L TO THE BOTTOM OF SWITCH PLATE
05		SWITCH BOARD AT 1'7½" FROM F.F.L TO THE BOTTOM OF SWITCH PLATE
06		SWITCH BOARD AT 0'9" FROM F.F.L TO THE BOTTOM OF SWITCH PLATE
07		FOOT LAMP 9" FROM F.F.L TO THE BOTTOM OF THE LAMP PLATE
08		6 A SHUTTER TYPE SOCKET WITH SWITCH
09		6/16 A SHUTTER TYPE SOCKET WITH SWITCH
10		GEYSER SWITCH
11		WALL BRACKET LIGHT
12		MIRROR LIGHT
13		PEDESTAL FAN
14		FLUORESCENT TUBE LIGHT
15		CEILING FLUSH TYPE LIGHT FITTING
16		CEILING FAN
17		EXHAUST FAN
18		COVE LIGHT
19		BELL
20		BELL PUSH
21		TELEPHONE
22		DISTRIBUTION BOARD
23		U.P.S.
24		METERING BOARD
25		EARTH POINT
26		EMERGENCY SWITCH
27		GEYSER
28		ONE WAY SWITCH
29		TWO WAY SWITCH
30		CASSETTE AIRCONDITIONER
31		ELECTRIC CHIMNEY SWITCH
32		TELEVISION
33		SPLIT AIR–CONDITIONER
34		OHT AUTOMATIC WATER LVL CONTROLLER
35		DECORATIVE MULTI–BULB LIGHT FITTING

POSITION TO BE DECIDED DURING DADOING

POSITION TO BE DECIDED DURING INTERIOR CARPENTRY

POSITION TO BE DECIDED DURING LANDSCAPING

REVISIONS:

NO.	DESCRIPTION	CHECKED	DATE

CLIENT:
MR.MANOGAR

PROJECT NAME:
RESIDENCE AT COIMBATORE

DRAWING TITLE:
ELECTRICAL ELEVATION–LIVING, DINING, BALCONY, POOJA

DATE	DWG NO.	DRAWN BY
23.06.22	A2:01	DOREEN S.
SCALE	PROJ CODE	CHECKED BY
1"=6'0"		ARUN P.

ARUN AND ASSOCIATES
ARCHITECTS & PLANNERS
1289, TRICHY ROAD,
COIMBATORE – 641 018.

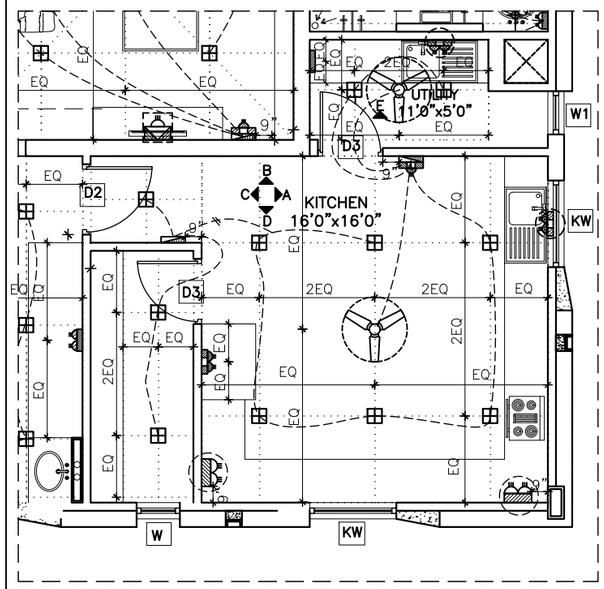

PART PLAN : KITCHEN, STORE

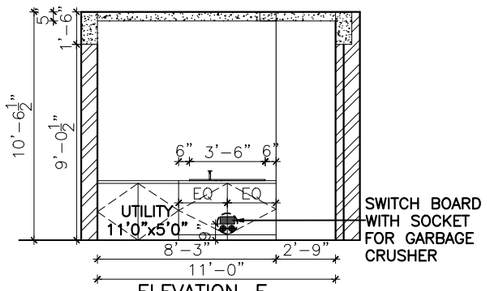

ELEVATION–E

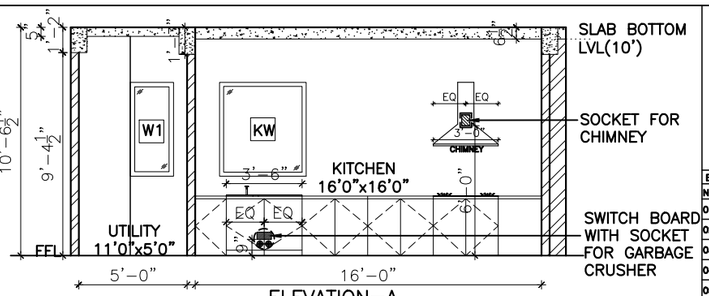

ELEVATION–A

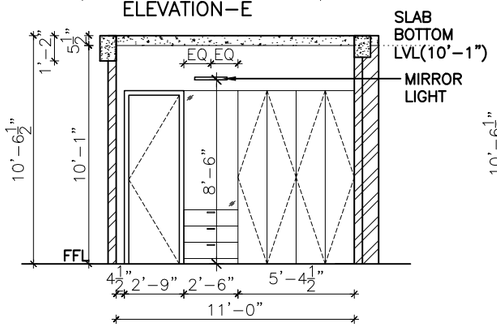

ELEVATION–H

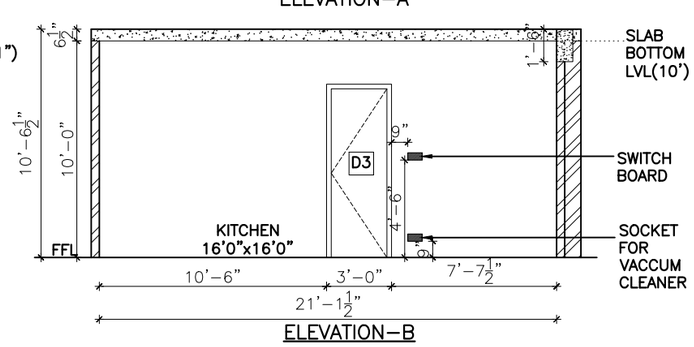

ELEVATION–B

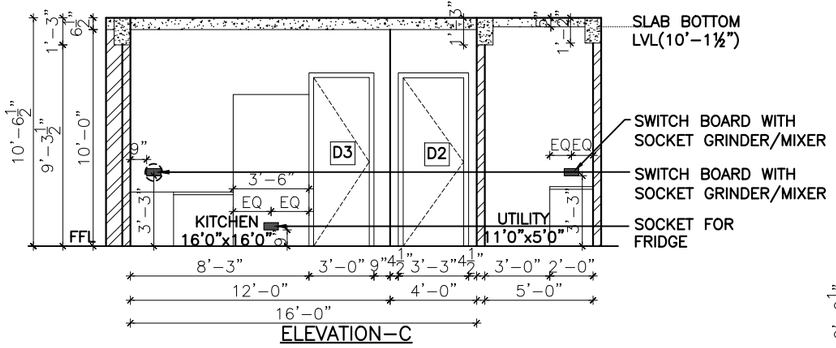

ELEVATION–C

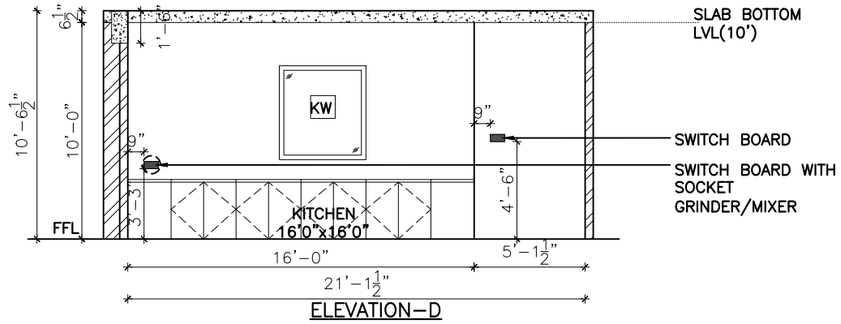

ELEVATION–D

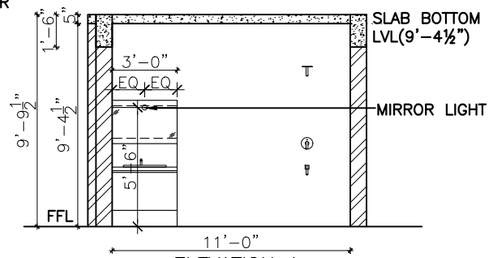

ELEVATION–I

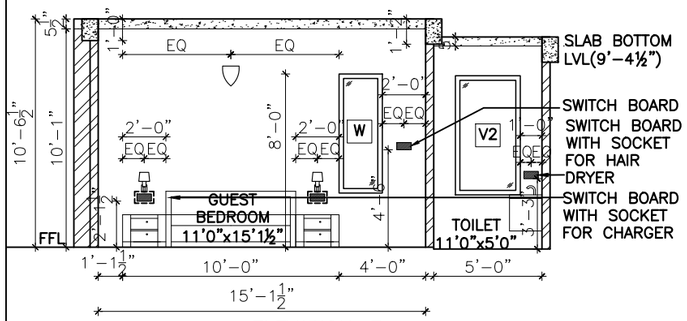

ELEVATION–F

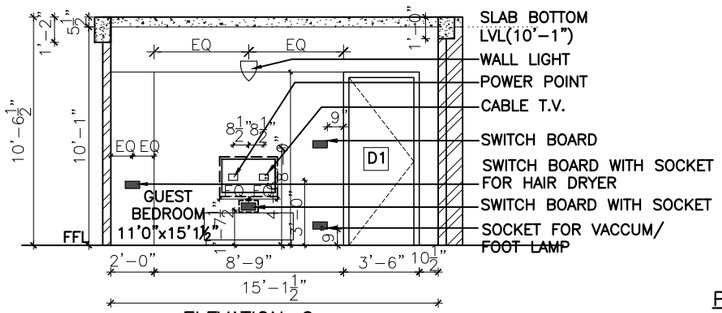

ELEVATION–G

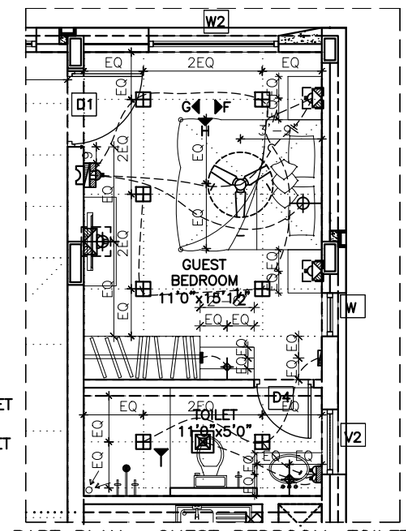

PART PLAN : GUEST BEDROOM, TOILET

This drawing is the property of ARUN AND ASSOCIATES (A&A) and shall not be passed on to any person not authorised by A&A to recieve it. It shall not be copied or modified in full or part without A&A's prior permission. The details furnished in this drawing are for this PROJECT only.

ELECTRICAL FITTINGS DETAIL:

NO	SYMBOL	DESCRIPTION
01		SWITCH BOARD AT 4'6" FROM F.F.L TO THE BOTTOM OF SWITCH PLATE
02		SWITCH BOARD AT 3'3" FROM F.F.L TO THE BOTTOM OF SWITCH PLATE
03		SWITCH BOARD AT 7'3" FROM F.F.L TO THE BOTTOM OF SWITCH PLATE
04		SWITCH BOARD AT 2'7½" FROM F.F.L TO THE BOTTOM OF SWITCH PLATE
05		SWITCH BOARD AT 1'7½" FROM F.F.L TO THE BOTTOM OF SWITCH PLATE
06		SWITCH BOARD AT 0'9" FROM F.F.L TO THE BOTTOM OF SWITCH PLATE
07		FOOT LAMP 9" FROM F.F.L TO THE BOTTOM OF THE LAMP PLATE
08		6 A SHUTTER TYPE SOCKET WITH SWITCH
09		6/16 A SHUTTER TYPE SOCKET WITH SWITCH
10		GEYSER SWITCH
11		WALL BRACKET LIGHT
12		MIRROR LIGHT
13		PEDESTAL FAN
14		FLUORESCENT TUBE LIGHT
15		CEILING FLUSH TYPE LIGHT FITTING
16		CEILING FAN
17		EXHAUST FAN
18		COVE LIGHT
19		BELL
20		BELL PUSH
21		TELEPHONE
22		DISTRIBUTION BOARD
23		U.P.S.
24		METERING BOARD
25		EARTH POINT
26		EMERGENCY SWITCH
27		GEYSER
28		ONE WAY SWITCH
29		TWO WAY SWITCH
30		CASSETTE AIRCONDITIONER
31		ELECTRIC CHIMNEY SWITCH
32		TELEVISION
33		SPLIT AIR–CONDITIONER
34		OHT AUTOMATIC WATER LVL CONTROLLER
35		DECORATIVE MULTI–BULB LIGHT FITTING

POSITION TO BE DECIDED DURING DADOING

POSITION TO BE DECIDED DURING INTERIOR CARPENTRY

POSITION TO BE DECIDED DURING LANDSCAPING

REVISIONS:

NO.	DESCRIPTION	CHECKED	DATE

CLIENT:
MR.MANOGAR

PROJECT NAME:
RESIDENCE AT COIMBATORE

DRAWING TITLE:
ELECTRICAL ELEVATION–KITCHEN,STORE, GUEST BEDROOM,TOILET

DATE	DWG NO.	DRAWN BY
22.06.22	A2:01	DOREEN S.
SCALE	PROJ CODE	CHECKED BY
1"=6'0"		ARUN P.

ARUN AND ASSOCIATES
ARCHITECTS & PLANNERS
1289, TRICHY ROAD,
COIMBATORE – 641 018.

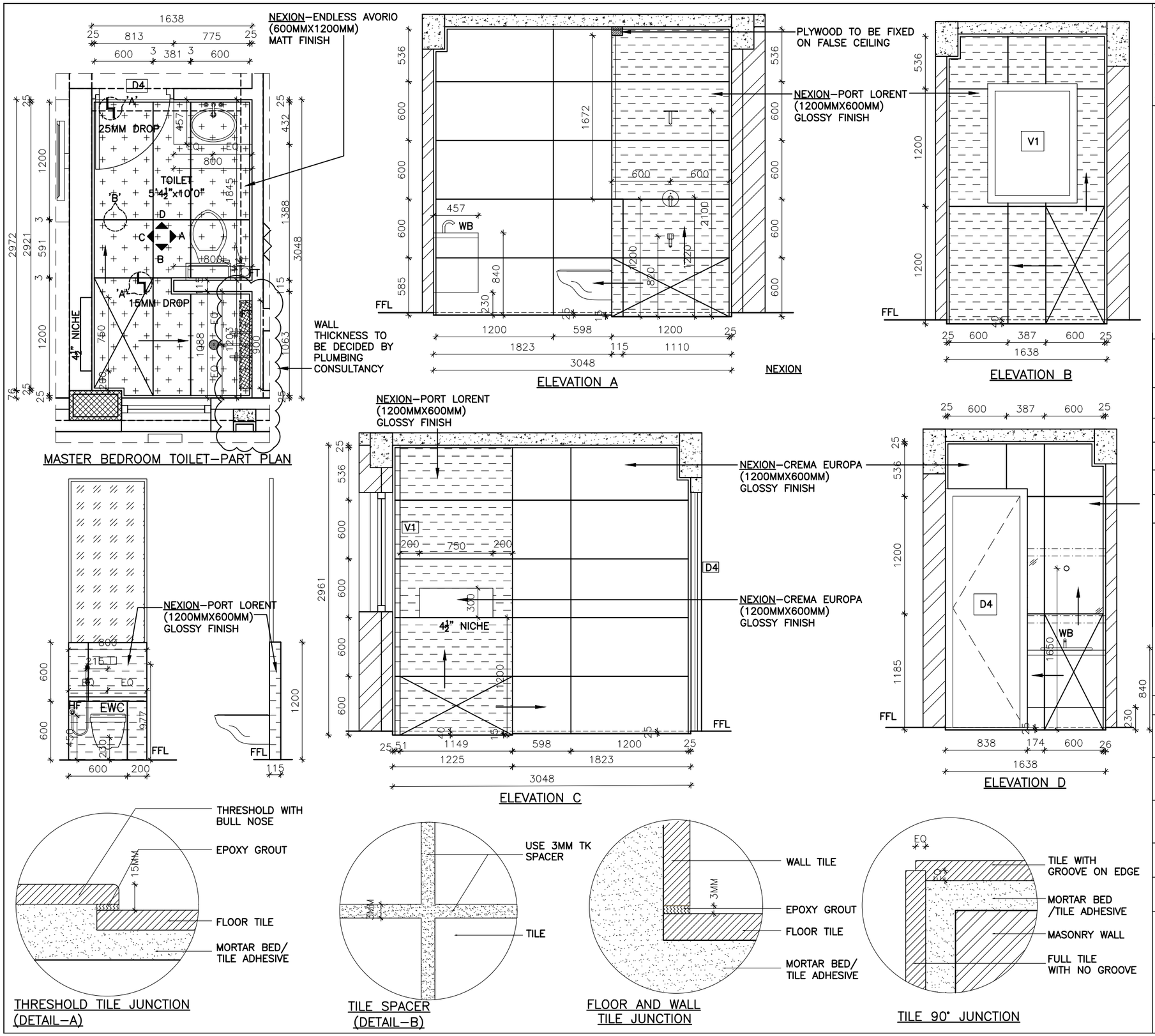

This drawing is the property of ARUN AND ASSOCIATES (A&A) and shall not be passed on to any person not authorised by A&A to recieve it. It shall not be copied or modified in full or part without A&A's prior permission. The details furnished in this drawing are for this PROJECT only.

WALL TILE:
NEXION–PORT LORENT
(1200MMX600MM)
GLOSSY FINISH

WALL TILE:
NEXION–CREMA EUROPA
(1200MMX600MM)
GLOSSY FINISH

FLOOR TILE:
NEXION–ENDLESS AVORIO
(1200MMX600MM)
MATT FINISH

THE FLOOR TILE LAYOUT SHOULD BE LAID SUCH THAT THE SPACERS MATCH WITH THE WALL

EWC	EUROPEAN WATER CLOSET
WB	WASH BASIN
HF	HEALTH FAUCET
FT	FLOOR TRAP

START TILE

TILE LAYING DIRECTION

NO.	DESCRIPTION	CHECKED	DATE

CLIENT:
MR.MANOGAR

PROJECT NAME:
RESIDENCE AT COIMBATORE

DRAWING TITLE:
MASTER BEDROOM TOILET– TILE LAYOUT

DATE	DWG NO.	DRAWN BY	N
23.09.22	A2:01	DOREEN S.	
SCALE	PROJ CODE	CHECKED BY	
1"=16'0"		ARUN P.	

ARUN AND ASSOCIATES
ARCHITECTS & PLANNERS
1289, TRICHY ROAD,
COIMBATORE – 641 018.

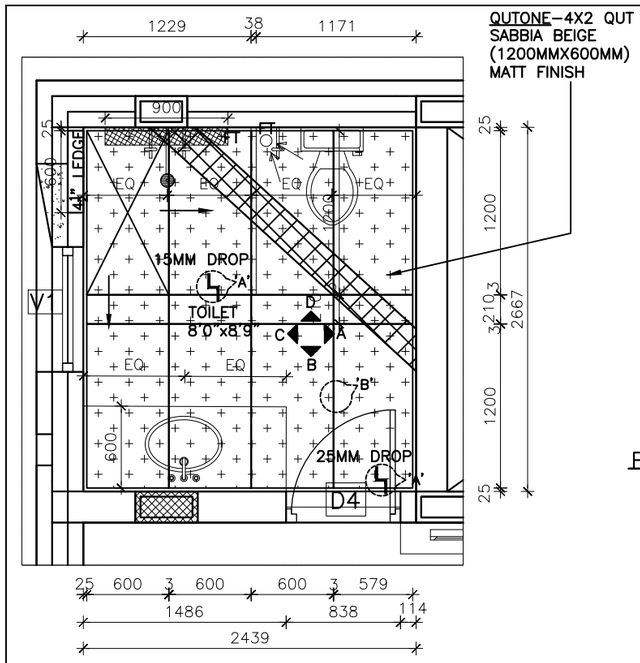

TOILET 2 – PART PLAN

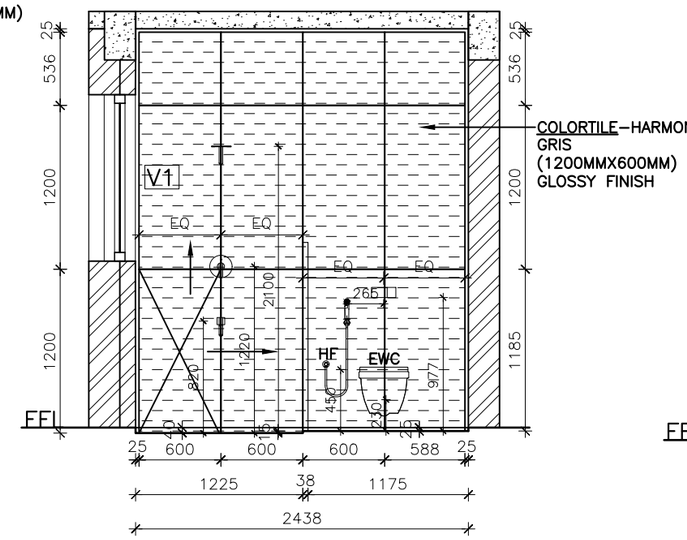

ELEVATION D

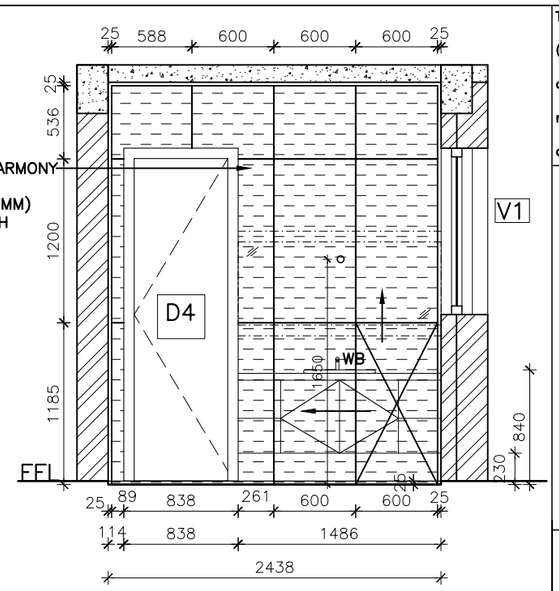

ELEVATION B

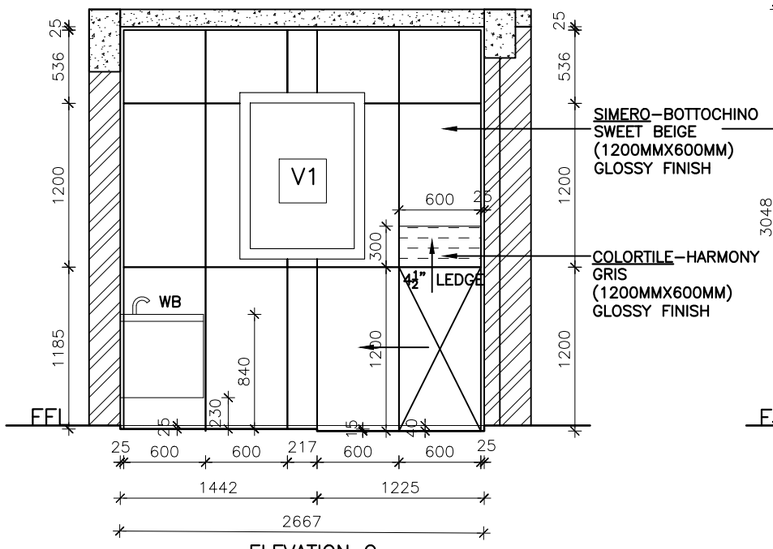

ELEVATION C

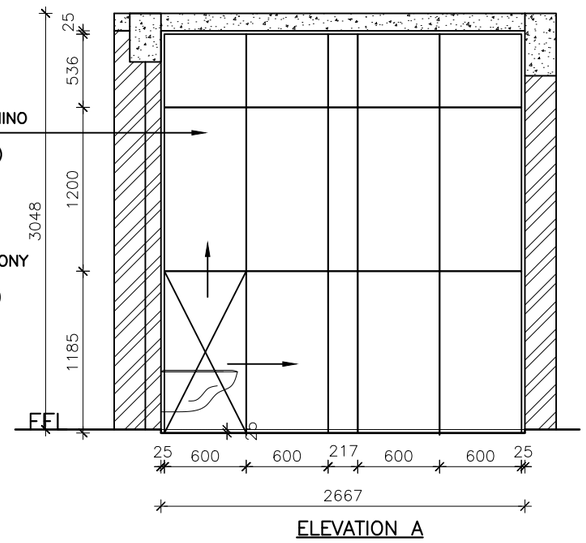

ELEVATION A

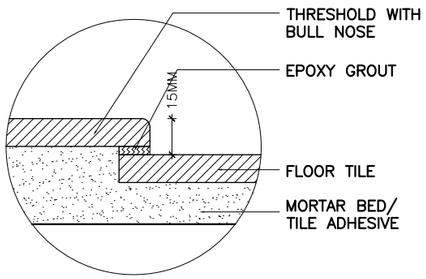

THRESHOLD TILE JUNCTION
(DETAIL–A)

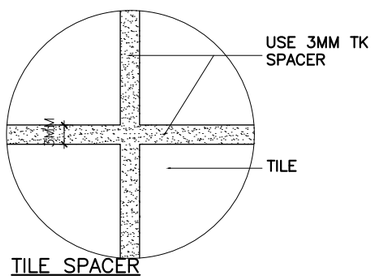

TILE SPACER
(DETAIL–B)

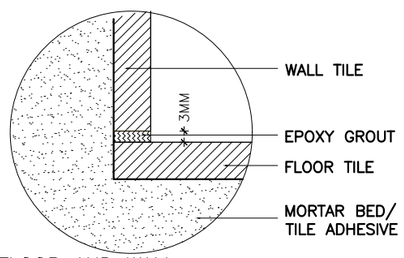

FLOOR AND WALL
TILE JUNCTION

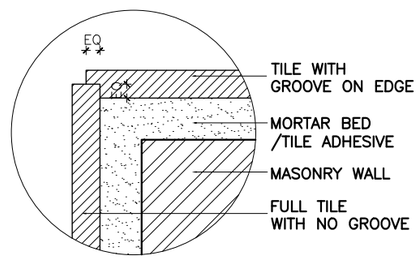

TILE 90° JUNCTION

This drawing is the property of ARUN AND ASSOCIATES (A&A) and shall not be passed on to any person not authorised by A&A to recieve it. It shall not be copied or modified in full or part without A&A's prior permission. The details furnished in this drawing are for this PROJECT only.

WALL TILE:
COLORTILE–HARMONY GRIS
(1200MMX600MM)
GLOSSY FINISH

WALL TILE:
SIMERO–BOTTOCHINO SWEET BEIGE
(1200MMX600MM)
GLOSSY FINISH

FLOOR TILE:
QUTONE–4X2 QUT SABBIA BEIGE
(1200MMX600MM)
MATT FINISH

THE FLOOR TILE LAYOUT SHOULD BE LAID SUCH THAT THE SPACERS MATCH WITH THE WALL

EWC	EUROPEAN WATER CLOSET
WB	WASH BASIN
HF	HEALTH FAUCET
FT	FLOOR TRAP

START TILE

TILE LAYING DIRECTION

NO.	DESCRIPTION	CHECKED	DATE

CLIENT:
MR.MANOGAR

PROJECT NAME:
RESIDENCE AT COIMBATORE

DRAWING TITLE:
TOILET 2– TILE LAYOUT

DATE	DWG NO.	DRAWN BY
24.09.22	A2:01	DOREEN S.
SCALE	PROJ CODE	CHECKED BY
1"=16'0"		ARUN P.

N

ARUN AND ASSOCIATES
ARCHITECTS & PLANNERS
1289, TRICHY ROAD,
COIMBATORE – 641 018.

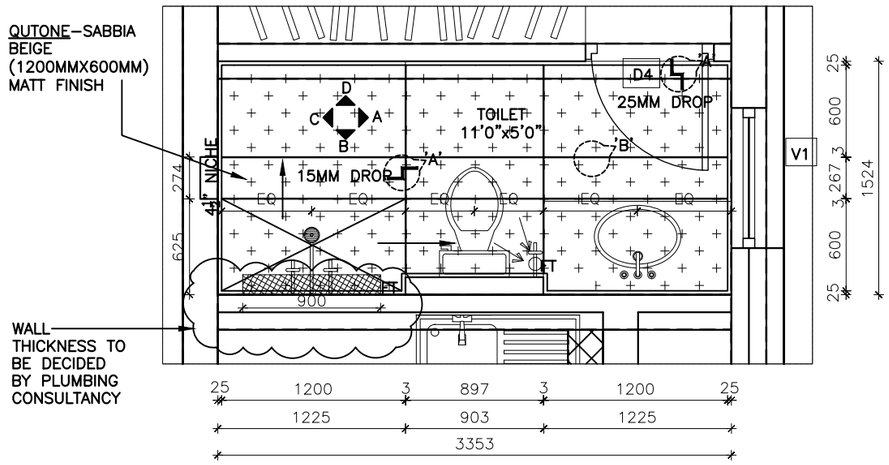

GUEST BEDROOM TOILET–PART PLAN

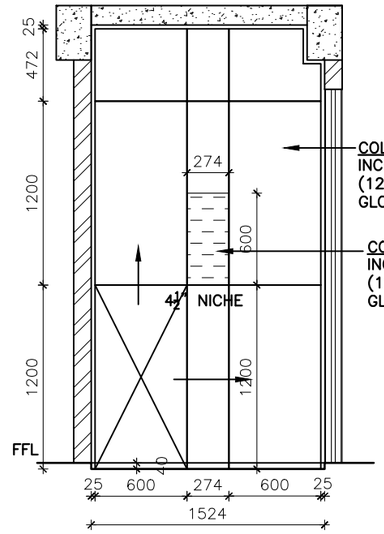

ELEVATION C

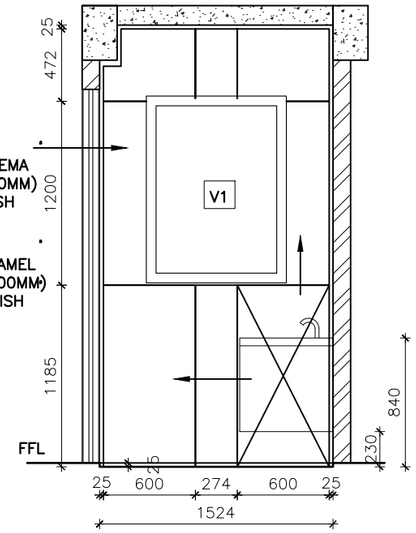

ELEVATION A

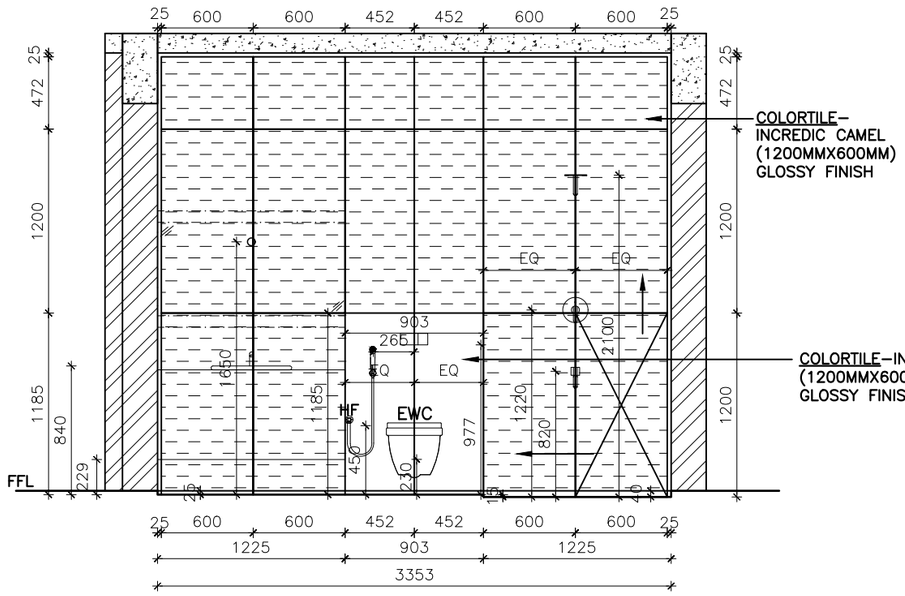

ELEVATION B

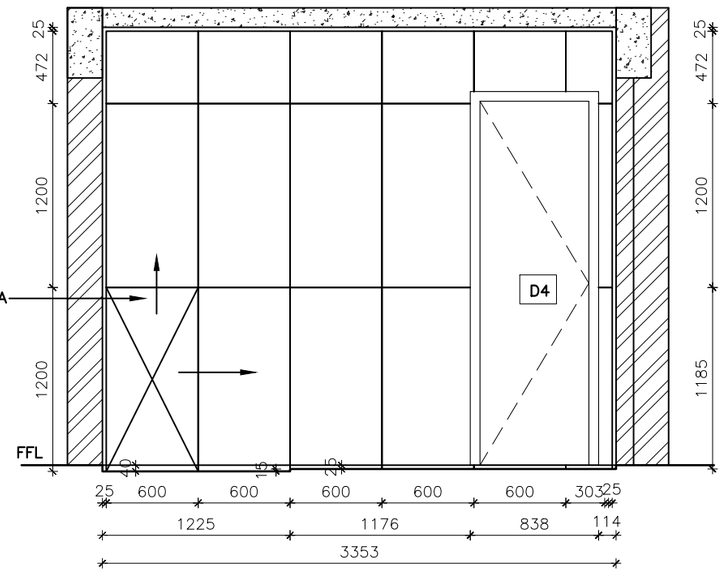

ELEVATION D

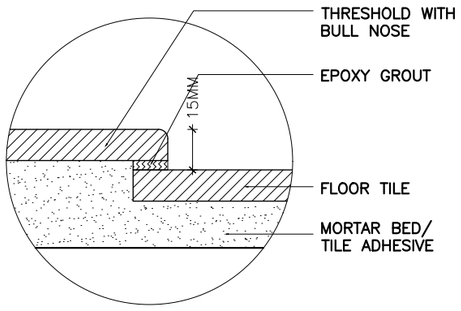

THRESHOLD TILE JUNCTION (DETAIL–A)

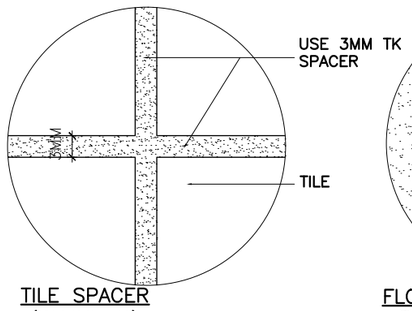

TILE SPACER (DETAIL–B)

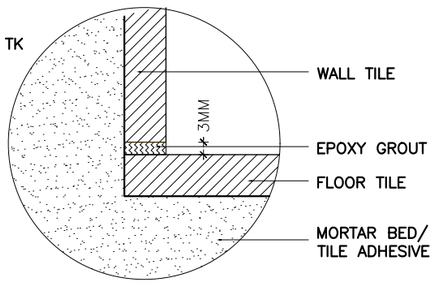

FLOOR AND WALL TILE JUNCTION

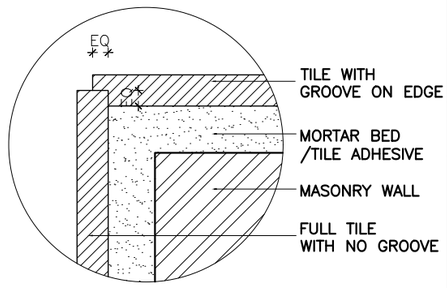

TILE 90° JUNCTION

This drawing is the property of ARUN AND ASSOCIATES (A&A) and shall not be passed on to any person not authorised by A&A to recieve it. It shall not be copied or modified in full or part without A&A's prior permission. The details furnished in this drawing are for this PROJECT only.

WALL TILE:
COLORTILE–INCREDIC CAMEL (1200MMX600MM) GLOSSY FINISH

WALL TILE:
COLORTILE–INCREDIC CREMA (1200MMX600MM) GLOSSY FINISH

FLOOR TILE:
QUTONE–SABBIA BEIGE (1200MMX600MM) MATT FINISH

THE FLOOR TILE LAYOUT SHOULD BE LAID SUCH THAT THE SPACERS MATCH WITH THE WALL

EWC	EUROPEAN WATER CLOSET
WB	WASH BASIN
HF	HEALTH FAUCET
FT	FLOOR TRAP

START TILE

TILE LAYING DIRECTION

NO.	DESCRIPTION	CHECKED	DATE

CLIENT:
MR.MANOGAR

PROJECT NAME:
RESIDENCE AT COIMBATORE

DRAWING TITLE:
GUEST BEDROOM TOILET– TILE LAYOUT

DATE	DWG NO.	DRAWN BY
23.09.22	A2:01	DOREEN S.
SCALE	PROJ CODE	CHECKED BY
1"=16'0"		ARUN P.

N

ARUN AND ASSOCIATES
ARCHITECTS & PLANNERS
1289, TRICHY ROAD,
COIMBATORE – 641 018.

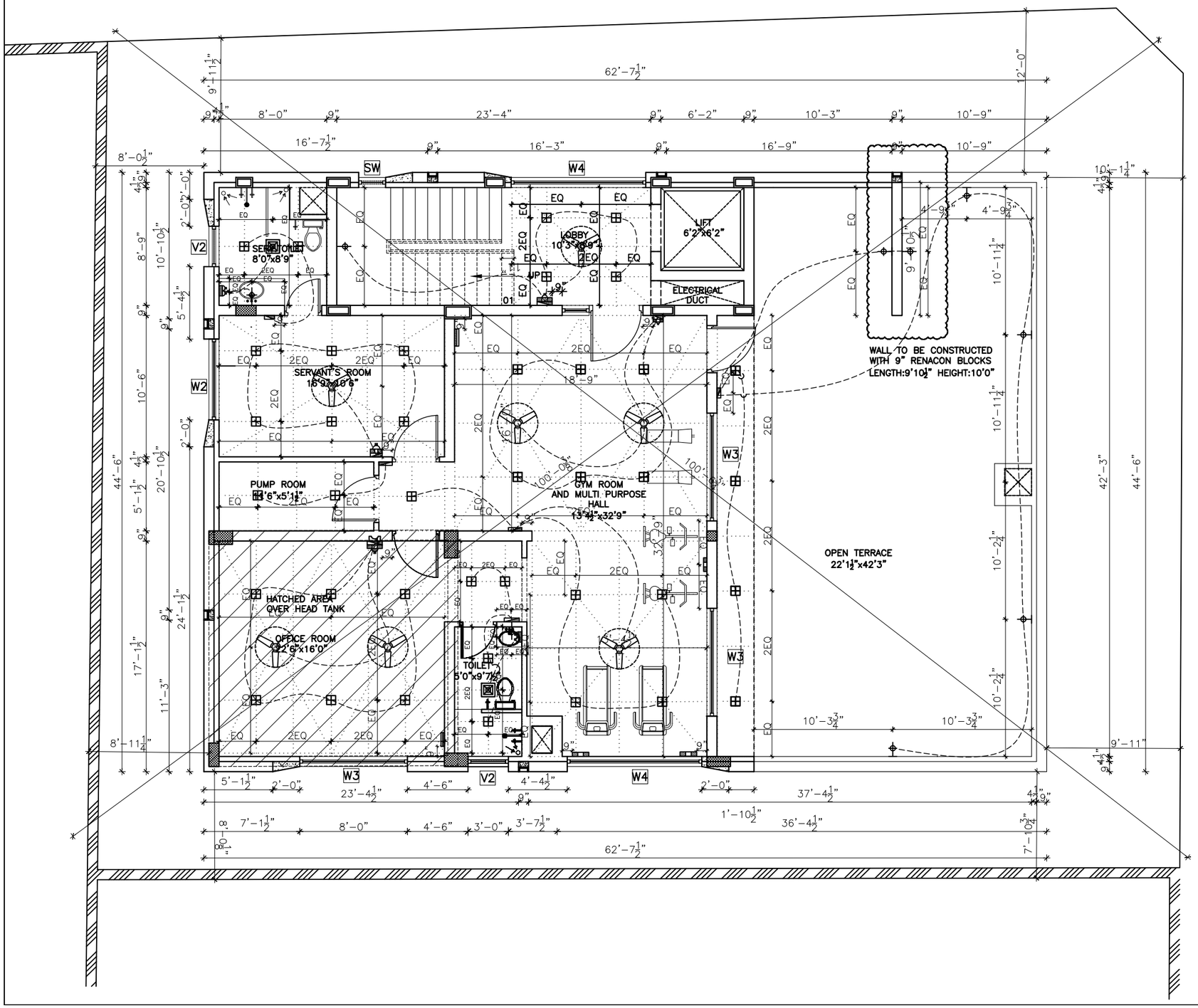

This drawing is the property of ARUN AND ASSOCIATES (A&A) and shall not be passed on to any person not authorised by A&A to recieve it. It shall not be copied or modified in full or part without A&A's prior permission. The details furnished in this drawing are for this PROJECT only.

TOTAL AREA – 2706.95
COMMON AREA – 287.3
BUILT AREA – 2418.7

STAIRCASE DETAILS:

STILT FLOOR FFL TO FIRST FLOOR FFL = 9'–6"
NO. OF STEPS =19; TREAD =11" ; RISER = 5¾"

FIRST FLOOR FFL TO TYPICAL FLOOR FFL = 10'–9"
NO. OF STEPS =21; TREAD =11" ; RISER = 6¼"

As per approval 3m(10 ft) setback required along the roadside.
As per approval 2.5m(8ft 3inc) setback required along the other two sides.

JOINERY DETAIL :

S.NO	TYPE	SIZE	SILL Lvl	NO. SF	1F	2F	3F	4F	ANC.	TOT
DOORS										
01.	MD	6'0"x9'0"	–	–	1	1	1	1	1	5
02.	PD	4'0"x9'0"		–	1	1	1	1	–	4
03.	D1	3'6"x9'0"	–	–	3	3	3	3	3	15
04.	D2	3'3"x9'0"	–	–	1	1	1	1	–	4
05.	D3	3'0"x8'0"	–	–	3	3	3	3	–	12
06.	D4	2'9"x8'0"	–	2	3	3	3	3	2	16
WINDOW										
07.	W	2'0"x5'6"	2'6"	–	3	3	3	3	–	12
08.	W1	2'0"x4'4"	3'8"	–	1	1	1	1	–	4
09.	W2	6'0"x5'6"	2'6"	–	3	3	3	3	1	13
10.	W3	8'0"x5'6"	2'6"	–	1	1	1	1	1	5
11.	W4	10'0"x5'6"	2'6"	–	2	2	2	2	1	9
12.	FW	10'0"xB.B	9"	1	–	–	–	–	–	1
13.	KW	4'0"x4'4"	3'8"	–	2	2	2	2	–	8
14.	SW	2'0"x5'6"	2'6"	–	1	–	1	1	–	3
VENTILATOR										
15.	V	2'0"x4'0"	4'0"	2	–	–	–	–	–	2
16.	V1	3'0"x4'4"	3'8"	–	–	–	1	1	–	2
17.	V2	3'0"x5'6"	2'6"	–	3	3	2	2	2	12
OPENING										
18.	O	13'0"xC.B	–	–	1	1	1	1	–	4
19.	O1	3'0"xC.B	–	–	1	1	1	1	–	4

REVISIONS:

NO.	DESCRIPTION	CHECKED	DATE
1.	REVISION 1 – LEVELS	P.ARUN	07.03.22

CLIENT:
MR.MANOGAR

PROJECT NAME:
RESIDENCE AT COIMBATORE

DRAWING TITLE:
ANC. FLOOR PLAN – ELECTRICAL LAYOUT

DATE	DWG NO.	DRAWN BY
29.08.22	A2:01	DOREEN S.
SCALE	PROJ CODE	CHECKED BY
1"=16'0"		ARUN P.

N

ARUN AND ASSOCIATES
ARCHITECTS & PLANNERS
1289, TRICHY ROAD,
COIMBATORE – 641 018.

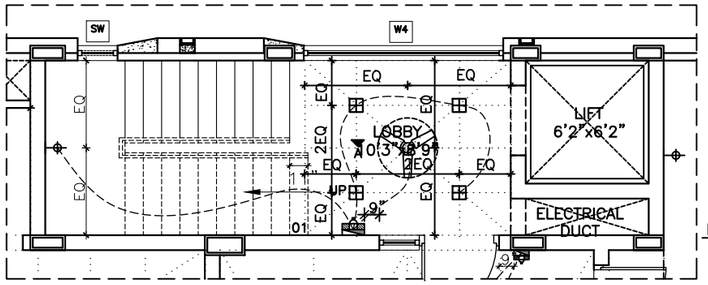

PART PLAN : LOBBY

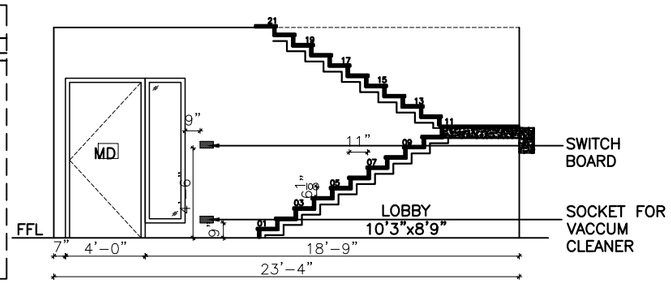

ELEVATION–A

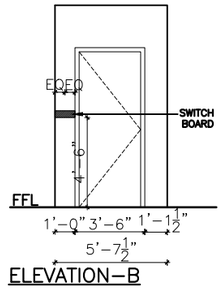

ELEVATION–B

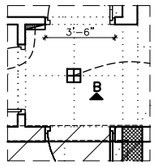

PART PLAN : PASSAGE

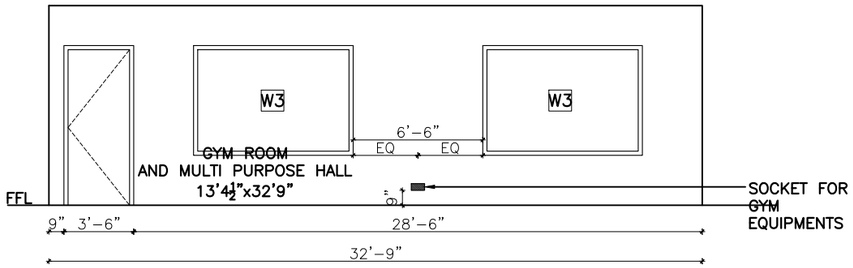

ELEVATION–F

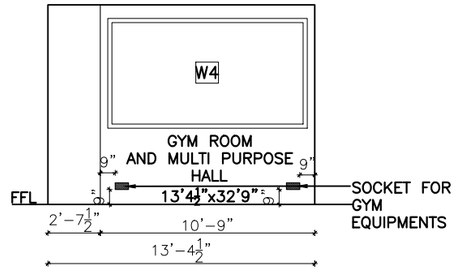

ELEVATION–E

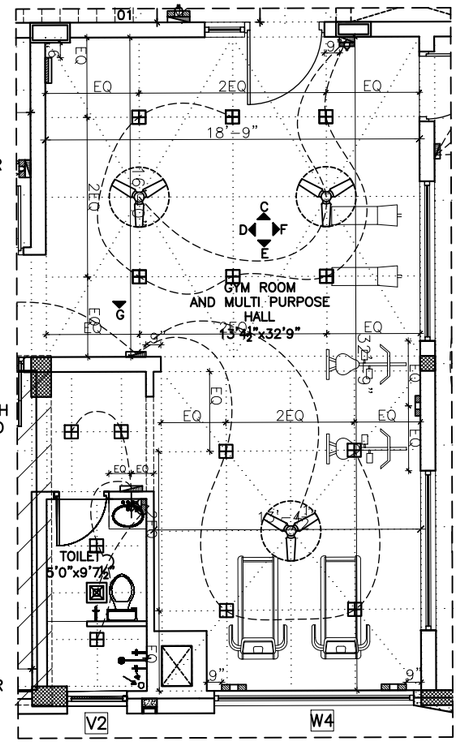

PART PLAN : GYM AND MULTI PURPOSE HALL

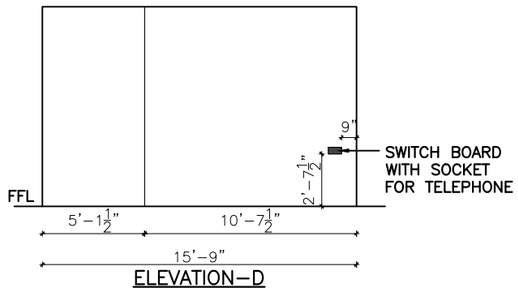

ELEVATION–D

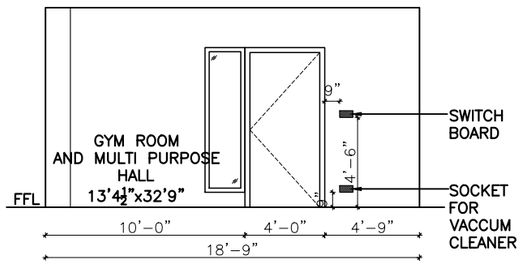

ELEVATION–C

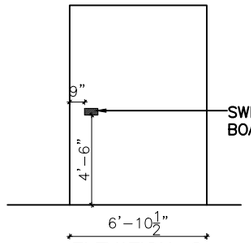

ELEVATION–G

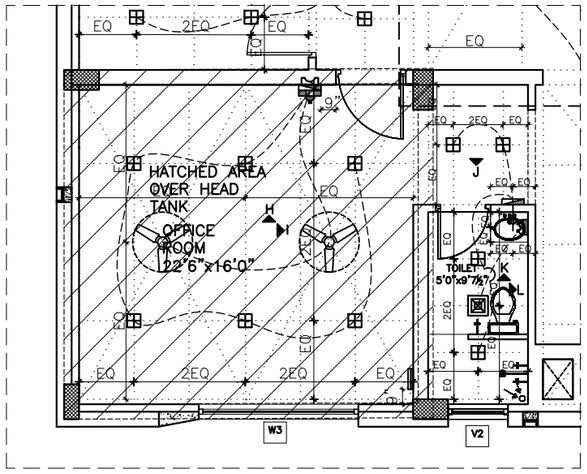

PART PLAN : OFFICE ROOM, TOILET

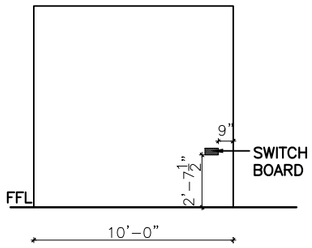

ELEVATION–I

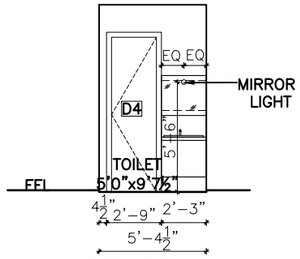

ELEVATION–K

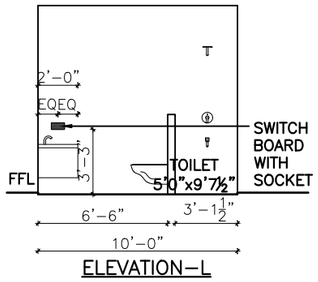

ELEVATION–L

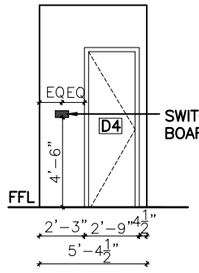

ELEVATION–J

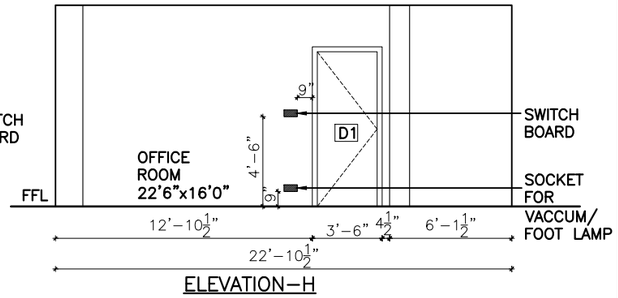

ELEVATION–H

This drawing is the property of ARUN AND ASSOCIATES (A&A) and shall not be passed on to any person not authorised by A&A to recieve it. It shall not be copied or modified in full or part without A&A's prior permission. The details furnished in this drawing are for this PROJECT only.

ELECTRICAL FITTINGS DETAIL:

NO	SYMBOL	DESCRIPTION
01		SWITCH BOARD AT 4'6" FROM F.F.L TO THE BOTTOM OF SWITCH PLATE
02		SWITCH BOARD AT 3'3" FROM F.F.L TO THE BOTTOM OF SWITCH PLATE
03		SWITCH BOARD AT 7'3" FROM F.F.L TO THE BOTTOM OF SWITCH PLATE
04		SWITCH BOARD AT 2'7½" FROM F.F.L TO THE BOTTOM OF SWITCH PLATE
05		SWITCH BOARD AT 1'7½" FROM F.F.L TO THE BOTTOM OF SWITCH PLATE
06		SWITCH BOARD AT 0'9" FROM F.F.L TO THE BOTTOM OF SWITCH PLATE
07		FOOT LAMP 9" FROM F.F.L TO THE BOTTOM OF THE LAMP PLATE
08		6 A SHUTTER TYPE SOCKET WITH SWITCH
09		6/16 A SHUTTER TYPE SOCKET WITH SWITCH
10		GEYSER SWITCH
11		WALL BRACKET LIGHT
12		MIRROR LIGHT
13		PEDESTAL FAN
14		FLUORESCENT TUBE LIGHT
15		CEILING FLUSH TYPE LIGHT FITTING
16		CEILING FAN
17		EXHAUST FAN
18		COVE LIGHT
19		BELL
20		BELL PUSH
21		TELEPHONE
22		DISTRIBUTION BOARD
23		U.P.S.
24		METERING BOARD
25		EARTH POINT
26		EMERGENCY SWITCH
27		GEYSER
28		ONE WAY SWITCH
29		TWO WAY SWITCH
30		CASSETTE AIRCONDITIONER
31		ELECTRIC CHIMNEY SWITCH
32		TELEVISION
33		SPLIT AIR–CONDITIONER
34		OHT AUTOMATIC WATER LVL CONTROLLER
35		DECORATIVE MULTI–BULB LIGHT FITTING

POSITION TO BE DECIDED DURING DADOING

POSITION TO BE DECIDED DURING INTERIOR CARPENTRY

POSITION TO BE DECIDED DURING LANDSCAPING

REVISIONS:

NO.	DESCRIPTION	CHECKED	DATE

CLIENT:
MR.MANOGAR

PROJECT NAME:
RESIDENCE AT COIMBATORE

DRAWING TITLE:
ELECTRICAL ELEVATION–LOBBY, PASSAGE GYM AND MULTI PURPOSE HALL

DATE	DWG NO.	DRAWN BY
12.08.22	A2:01	DOREEN S.
SCALE	PROJ CODE	CHECKED BY
1"=6'0"		ARUN P.

ARUN AND ASSOCIATES
ARCHITECTS & PLANNERS
1289, TRICHY ROAD,
COIMBATORE – 641 018.

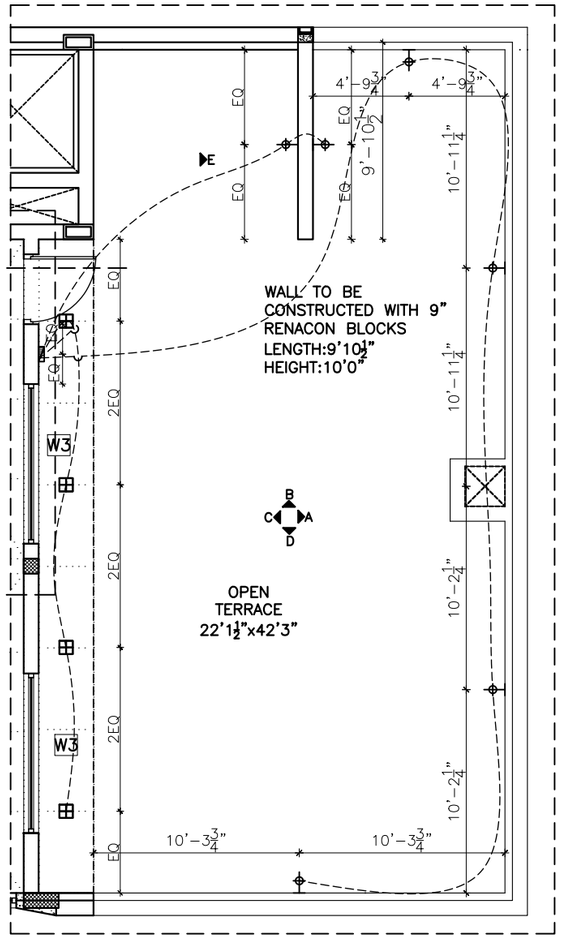

PART PLAN : OPEN TERRACE

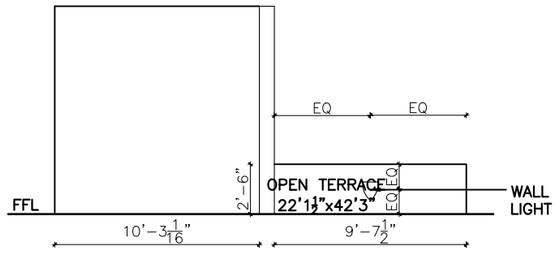

ELEVATION–B

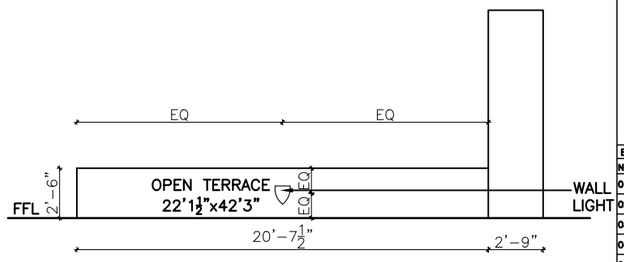

ELEVATION–D

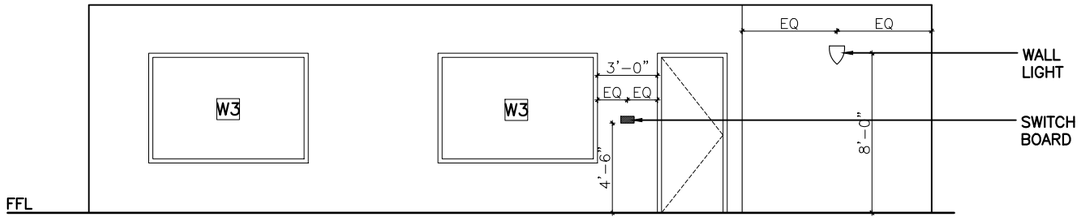

ELEVATION–C

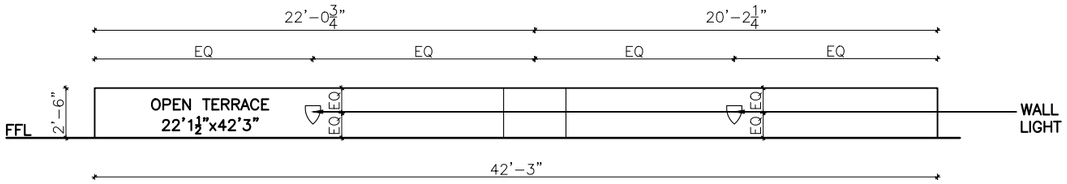

ELEVATION–A

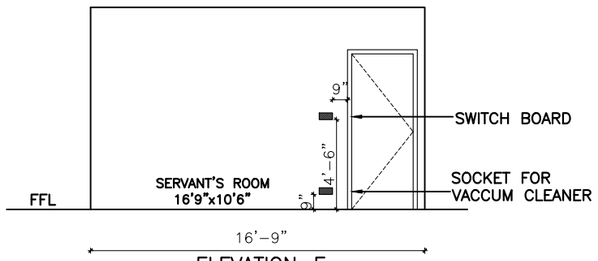

ELEVATION–F

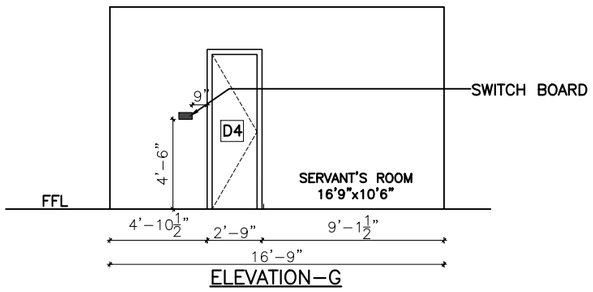

ELEVATION–G

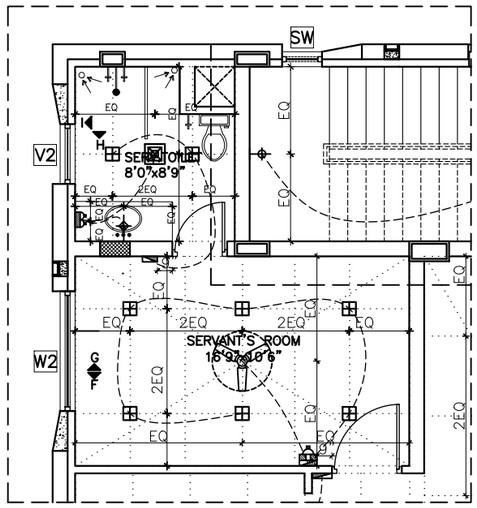

PART PLAN : SERVANT'S ROOM, SERVANT'S TOILET

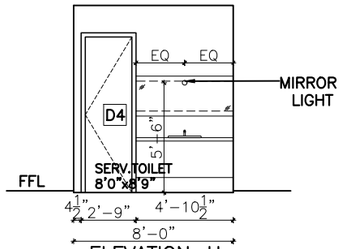

ELEVATION–H

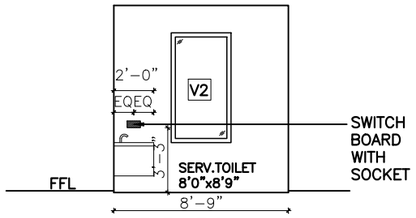

ELEVATION–I

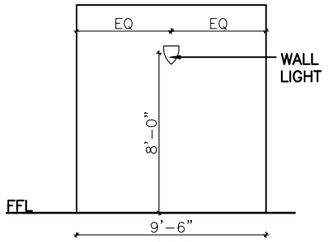

ELEVATION–E

This drawing is the property of ARUN AND ASSOCIATES (A&A) and shall not be passed on to any person not authorised by A&A to recieve it. It shall not be copied or modified in full or part without A&A's prior permission. The details furnished in this drawing are for this PROJECT only.

ELECTRICAL FITTINGS DETAIL:

NO	SYMBOL	DESCRIPTION
01		SWITCH BOARD AT 4'6" FROM F.F.L TO THE BOTTOM OF SWITCH PLATE
02		SWITCH BOARD AT 3'3" FROM F.F.L TO THE BOTTOM OF SWITCH PLATE
03		SWITCH BOARD AT 7'3" FROM F.F.L TO THE BOTTOM OF SWITCH PLATE
04		SWITCH BOARD AT 2'7½" FROM F.F.L TO THE BOTTOM OF SWITCH PLATE
05		SWITCH BOARD AT 1'7½" FROM F.F.L TO THE BOTTOM OF SWITCH PLATE
06		SWITCH BOARD AT 0'9" FROM F.F.L TO THE BOTTOM OF SWITCH PLATE
07		FOOT LAMP 9" FROM F.F.L TO THE BOTTOM OF THE LAMP PLATE
08		6 A SHUTTER TYPE SOCKET WITH SWITCH
09		6/16 A SHUTTER TYPE SOCKET WITH SWITCH
10		GEYSER SWITCH
11		WALL BRACKET LIGHT
12		MIRROR LIGHT
13		PEDESTAL FAN
14		FLUORESCENT TUBE LIGHT
15		CEILING FLUSH TYPE LIGHT FITTING
16		CEILING FAN
17		EXHAUST FAN
18		COVE LIGHT
19		BELL
20		BELL PUSH
21		TELEPHONE
22		DISTRIBUTION BOARD
23		U.P.S.
24		METERING BOARD
25		EARTH POINT
26		EMERGENCY SWITCH
27		GEYSER
28		ONE WAY SWITCH
29		TWO WAY SWITCH
30		CASSETTE AIRCONDITIONER
31		ELECTRIC CHIMNEY SWITCH
32		TELEVISION
33		SPLIT AIR–CONDITIONER
34		OHT AUTOMATIC WATER LVL CONTROLLER
35		DECORATIVE MULTI–BULB LIGHT FITTING

POSITION TO BE DECIDED DURING DADOING

POSITION TO BE DECIDED DURING INTERIOR CARPENTRY

POSITION TO BE DECIDED DURING LANDSCAPING

REVISIONS:

NO.	DESCRIPTION	CHECKED	DATE

CLIENT:
MR.MANOGAR

PROJECT NAME:
RESIDENCE AT COIMBATORE

DRAWING TITLE:
ELECTRICAL ELEVATION–OPEN TERRACE, SERVANT'S ROOM, SERVANT'S TOILET

DATE	DWG NO.	DRAWN BY
13.08.22	A2:01	DOREEN S.
SCALE	PROJ CODE	CHECKED BY
1"=6'0"		ARUN P.

ARUN AND ASSOCIATES
ARCHITECTS & PLANNERS
1289, TRICHY ROAD,
COIMBATORE – 641 018.

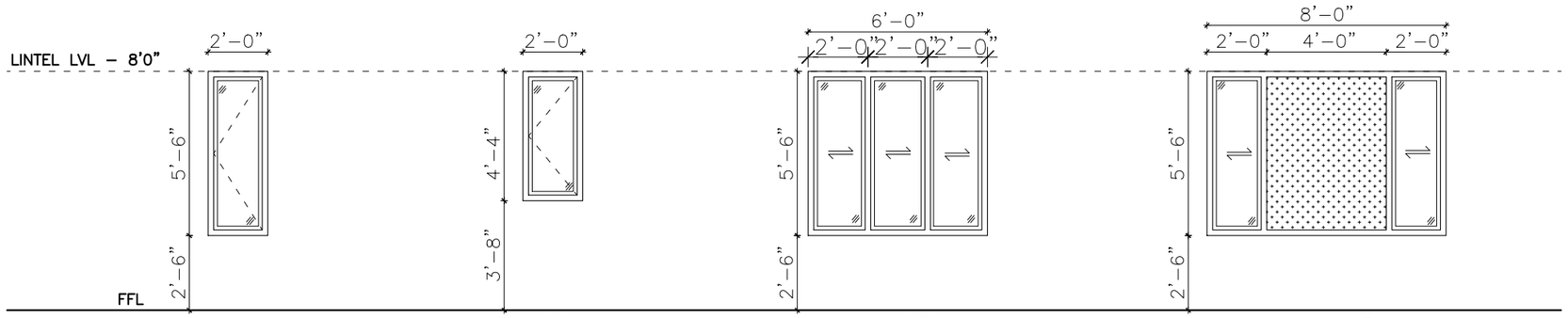

W
WINDOW
2'0"X5'6"
TYPICAL FLOOR 1,2,3&4
4NOS. (GUEST BEDROOM–01,
STORE–01,MASTER BEDROOM–01)
(TOTAL–12)

W1
WINDOW
2'0"X4'4"
TYPICAL FLOOR 1,2,3&4
4NOS. (UTILITY–01)
(TOTAL–4)

W2
WINDOW
6'0"X5'6"
TYPICAL FLOOR 1,2,3&4
4 NOS. (LIVING ROOM–01,
GUEST BEDROOM–01,
BEDROOM 1–01)
ANC FLOOR –SERVANT'S ROOM–01
(TOTAL–13)

W3
WINDOW
8'0"X5'6"
TYPICAL FLOOR 1,2,3&4
4NOS. (MASTER BEDROOM–01)
ANC. FLOOR (GYM AND
MULTIPURPOSE HALL –02
OFFICE ROOM –01)
(TOTAL–7)

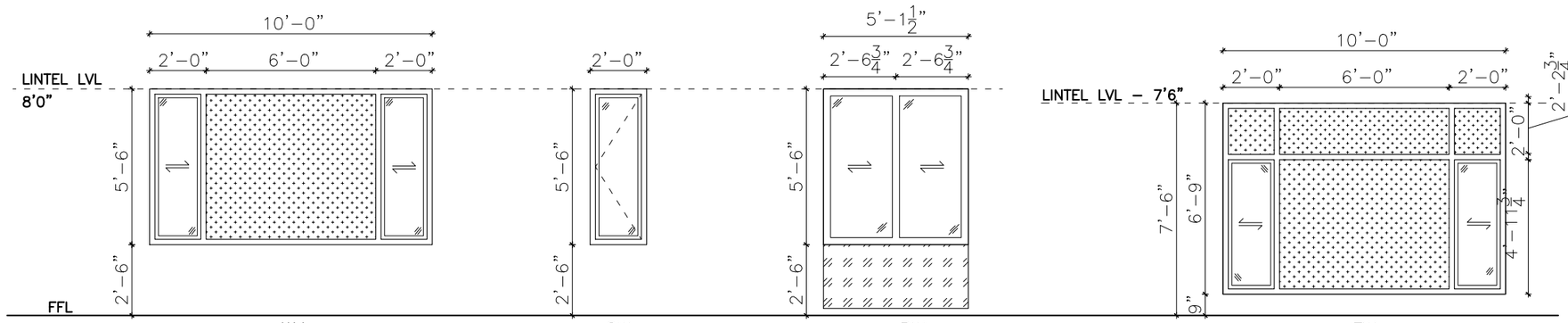

W4
WINDOW
10'0"X5'6"
TYPICAL FLOOR 1,2,3&4
4NOS. (LOBBY–01,DINING – 01)
ANC FLOOR –(LOBBY –01
GYM AND MULTI PURPOSE HALL –01)
(TOTAL–10)

SW
STAIR FIXED WINDOW
2'0"X5'6" (4 NOS.)
ANC FLOOR –(STAIRCASE
MIDLANDING–01)
(TOTAL=5)

BW
BALCONY WINDOW
5'1½"X5'6"
TYPICAL FLOOR 1,2,3&4
4NOS. (BALCONY–01)
(TOTAL–4)

FW
WINDOW
STILT FLOOR –LOBBY –01
(TOTAL–1)

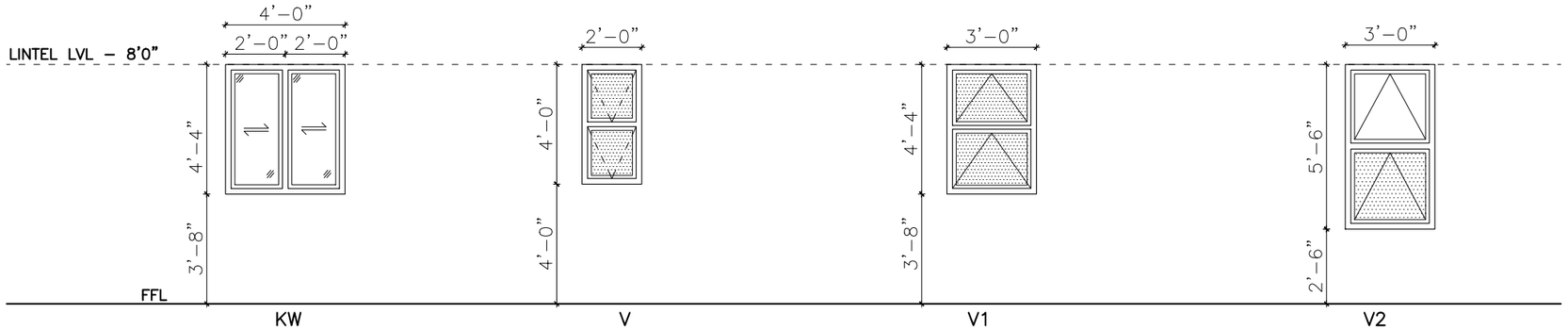

KW
KITCHEN WINDOW
4'0"X4'4"
TYPICAL FLOOR 1,2,3&4
4NOS.(KITCHEN – 02)
(TOTAL=8)

V
VENTILATOR
2'0"X4'0" (2 NO.S)
(STILT FLOOR TOILET–01,
STILT FLOOR BATH–01)
(TOTAL–2)

V1
VENTILATOR
3'0"X4'4"
TYPICAL FLOOR 3&4
(TOTAL 2)

V2
VENTILATOR
3'0"X5'6"
TYPICAL FLOOR 1,2,3&4
AND ANC. FLOOR TOILETS
(TOTAL 12)

This drawing is the property of ARUN AND ASSOCIATES (A&A) and shall not be passed on to any person not authorised by A&A to recieve it. It shall not be copied or modified in full or part without A&A's prior permission. The details furnished in this drawing are for this PROJECT only.

JOINERY DETAIL :

S.NO	TYPE	SIZE	SILL Lvl	NO. SF	1F	2F	3F	4F	ANC.	TOT
WINDOW										
01.	W	2'0"x5'6"	2'6"	–	3	3	3	3	–	12
02.	W1	2'0"x4'4"	3'8"	–	1	1	1	1	–	4
03.	W2	6'0"x5'6"	2'6"	–	3	3	3	3	1	13
04.	W3	8'0"x5'6"	2'6"	–	1	1	1	1	3	7
05.	W4	10'0"x5'6"	2'6"	–	2	2	2	2	2	10
06.	FW	10'0"x8.8	9"	1	–	–	–	–	–	1
07.	KW	4'0"x4'4"	3'8"	–	2	2	2	2	–	8
08.	SW	2'0"x5'6"	2'6"	–	1	1	1	1	1	5
09.	BW	5'1½"x5'6"	2'6"	–	1	1	1	1	–	4
VENTILATOR										
10.	V	2'0"x4'0"	4'0"	2	–	–	–	–	–	2
11.	V1	3'0"x4'4"	3'8"	–	–	–	1	1	–	2
12.	V2	3'0"x5'6"	2'6"	–	3	3	2	2	2	12

LEGEND:

01. LAMINATED GLASS (6MM PLAIN GLASS+ 1.5 MM PVB FOIL+6MM PLAIN GLASS)

02. ACID ETCHED FROSTED GLASS

03. 6MM TK PLAIN GLASS

REVISIONS:

NO.	DESCRIPTION	CHECKED	DATE

CLIENT:
MR.MANOGAR

PROJECT NAME:
PROPOSED HOUSING AT COIMBATORE

DRAWING TITLE:
WINDOW (UPVC) JOINERY DETAIL

DATE	DWG NO.	DRAWN BY
05.09.22	A2:01	DOREEN S.
SCALE	PROJ CODE	CHECKED BY
1"=6'0"	RES–367–18	ARUN P.

ARUN AND ASSOCIATES
ARCHITECTS & PLANNERS
1289, TRICHY ROAD,
COIMBATORE – 641 018.

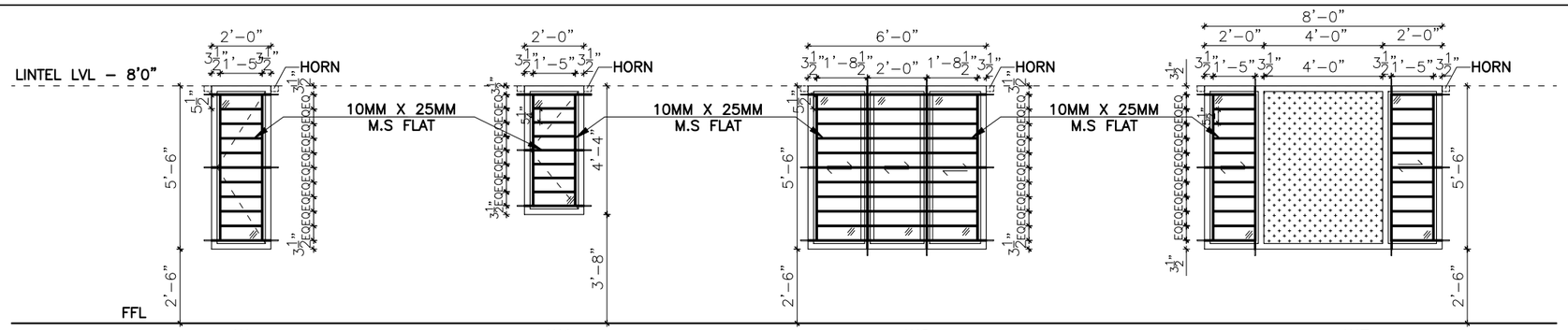

W
WINDOW
2'0"X5'6"
TYPICAL FLOOR 1,2,3&4
4NOS. (GUEST BEDROOM–01,
STORE–01,MASTER BEDROOM–01)
(TOTAL–12)

W1
WINDOW
2'0"X4'4"
TYPICAL FLOOR 1,2,3&4
4NOS. (UTILITY–01)
(TOTAL–4)

W2
WINDOW
6'0"X5'6"
TYPICAL FLOOR 1,2,3&4
4 NOS. (LIVING ROOM–01,
GUEST BEDROOM–01,
BEDROOM 1–01)
ANC FLOOR –SERVANT'S ROOM–01
(TOTAL–13)

W3
WINDOW
8'0"X5'6"
TYPICAL FLOOR 1,2,3&4
4NOS. (MASTER BEDROOM–01)
ANC. FLOOR (GYM AND
MULTIPURPOSE HALL –02
OFFICE ROOM –01)
(TOTAL–7)

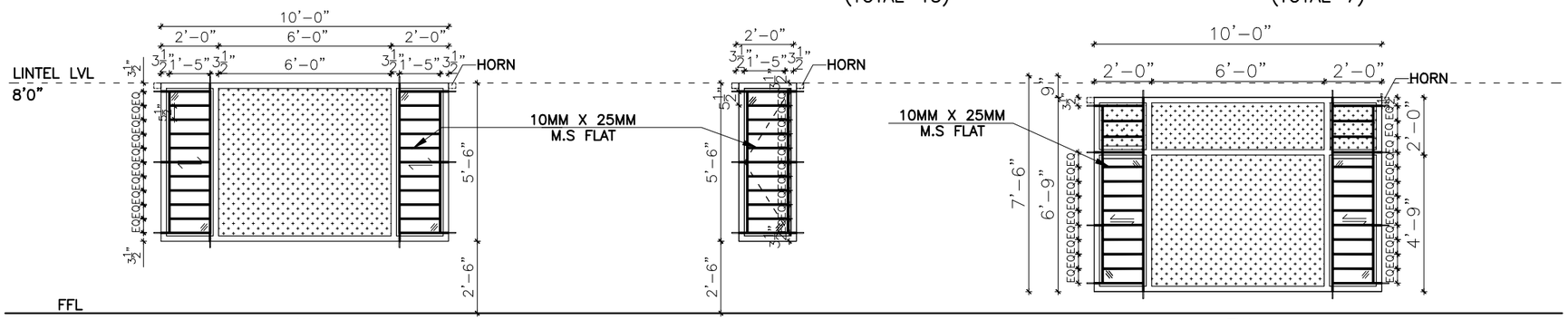

W4
WINDOW
10'0"X5'6"
TYPICAL FLOOR 1,2,3&4
4NOS. (LOBBY–01,DINING – 01)
ANC FLOOR –(LOBBY –01
GYM AND MULTI PURPOSE HALL –01)
(TOTAL–10)

SW
STAIR FIXED WINDOW
2'0"X5'6" (4 NOS.)
ANC FLOOR –(STAIRCASE
MIDLANDING–01)
(TOTAL=5)

FW
WINDOW
STILT FLOOR –LOBBY –01
(TOTAL–1)

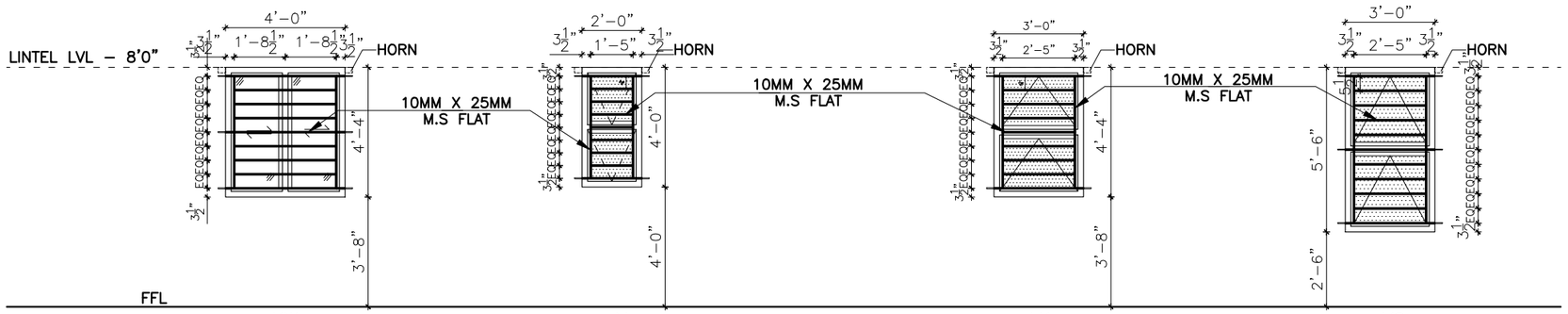

KW
KITCHEN WINDOW
4'0"X4'4"
TYPICAL FLOOR 1,2,3&4
4NOS.(KITCHEN – 02)
(TOTAL=8)

V
VENTILATOR
2'0"X4'0" (2 NO.S)
(STILT FLOOR TOILET–01,
STILT FLOOR BATH–01)
(TOTAL–2)

V1
VENTILATOR
3'0"X4'4"
TYPICAL FLOOR 3&4
(TOTAL 2)

V2
VENTILATOR
3'0"X5'6"
TYPICAL FLOOR 1,2,3&4
AND ANC. FLOOR TOILETS
(TOTAL 12)

This drawing is the property of ARUN AND ASSOCIATES (A&A) and shall not be passed on to any person not authorised by A&A to recieve it. It shall not be copied or modified in full or part without A&A's prior permission. The details furnished in this drawing are for this PROJECT only.

JOINERY DETAIL :

S.NO	TYPE	SIZE	SILL Lvl	NO. SF	1F	2F	3F	4F	TERRACE	TOTAL
WINDOW										
01.	W	2'0"x5'6"	2'6"	–	3	3	3	3	–	12
02.	W1	2'0"x4'4"	3'8"	–	1	1	1	1	–	4
03.	W2	6'0"x5'6"	2'6"	–	3	3	3	3	1	13
04.	W3	8'0"x5'6"	2'6"	–	1	1	1	1	3	7
05.	W4	10'0"x5'6"	2'6"	–	2	2	2	2	2	10
06.	FW	10'0"x8.8	9"	1	–	–	–	–	–	1
07.	KW	4'0"x4'4"	3'8"	–	2	2	2	2	–	8
08.	SW	2'0"x5'6"	2'6"	–	1	1	1	1	1	5
09.	BW	5'1½"x5'6"	2'6"	–	1	1	1	1	–	4
VENTILATOR										
10.	V	2'0"x4'0"	4'0"	2	–	–	–	–	–	2
11.	V1	3'0"x4'4"	3'8"	–	–	–	1	1	–	2
12.	V2	3'0"x5'6"	2'6"	–	3	3	2	2	2	12

LEGEND:

01. LAMINATED GLASS (6MM PLAIN GLASS+ 1.5 MM PVB FOIL+6MM PLAIN GLASS)

02. ACID ETCHED FROSTED GLASS

03. 6MM TK PLAIN GLASS

REVISIONS:

NO.	DESCRIPTION	CHECKED	DATE

CLIENT:
MR.MANOGAR

PROJECT NAME:
PROPOSED HOUSING AT COIMBATORE

DRAWING TITLE:
WINDOW (UPVC) JOINERY DETAIL

DATE	DWG NO.	DRAWN BY
09.08.22	A2:01	DOREEN S.
SCALE	PROJ CODE	CHECKED BY
1"=6'0"	RES–367–18	ARUN P.

ARUN AND ASSOCIATES
ARCHITECTS & PLANNERS
1289, TRICHY ROAD,
COIMBATORE – 641 018.

THIS DRAWING IS THE PROPERTY OF ARUN AND ASSOCIATES AND SHALL NOT BE PASSED ON TO ANY PERSON NOT AUTHORISED BY A&A TO RECEIVE IT. IT SHALL NOT BE COPIED OR MODIFIED IN FULL OR PART WITHOUT A&A'S PRIOR PERMISSION. THE DETAILS FURNISHED IN THIS DRG ARE FOR THIS PROJECT ONLY.

JOINERY DETAIL–DOOR

S. NO	TYPE		SIZE	SILL HT	LINTEL HT	SF	FF	SF	TF	FF	TOT
01	MD	MAIN DOOR	6'0"x9'0"	–	9'0"	–	01	01	01	01	04
02	PD	POOJA DOOR	4'0"X8'0"	–	8'0"	–	01	01	01	01	04
03	D1	DOOR	3'6"X8'0"	–	8'0"	–	03	03	03	03	12
04	D2	DOOR	3'3"X8'0"	–	8'0"	–	01	01	01	01	04
04	D3	DOOR	3'0"X8'0"	–	8'0"	–	03	03	03	03	12
04	D4	DOOR	2'9"X8'0"	–	8'0"	02	03	03	03	03	14

NOTE:

–LAMINATED GLASS (6mm TOUGHENED GLASS +1.5mm PVB+6mm TOUGHENED GLASS)

D4/V is an FRP DOOR

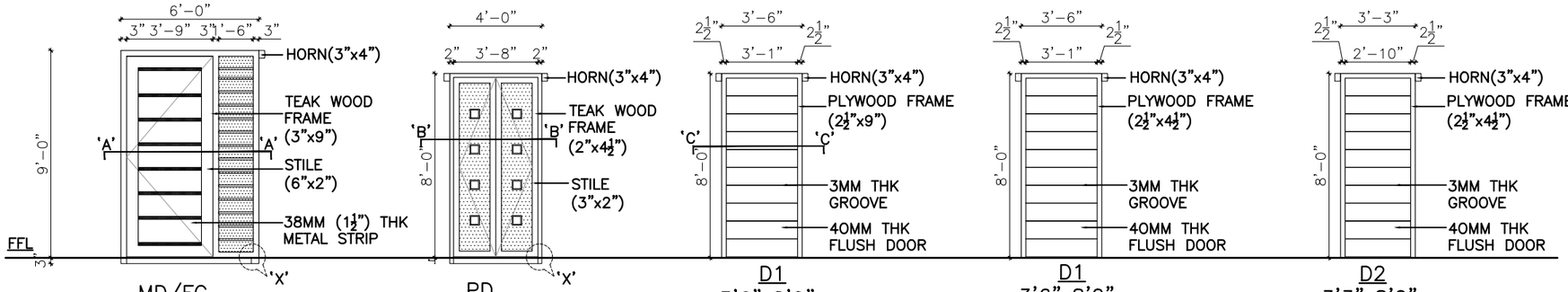

MD/FG
MAIN DOOR
6'0"X9'0"

PD
POOJA DOOR
4'0"x8'0"

D1
3'6"x8'0"
(9" BRICK WALL)

(GUEST BEDROOM–01, MASTER BEDROOM –01)
TOTAL – 02

D1
3'6"x8'0"
(4½" BRICK WALL)

(BEDROOM 1–01)
TOTAL – 01

D2
3'3"x8'0"
(4½" BRICK WALL)

(KITCHEN–01)
TOTAL – 01

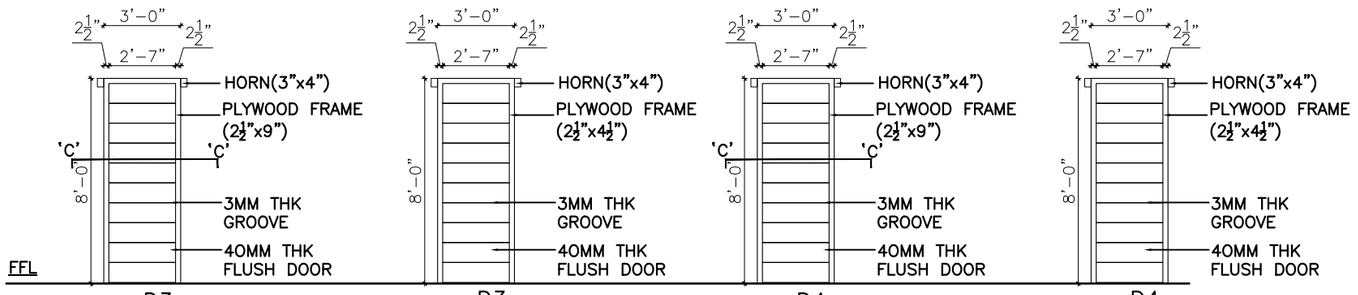

D3
3'0"x8'0"
(9" BRICK WALL)

(MASTER BEDROOM –01)
TOTAL – 01

D3
3'0"x8'0"
(4½" BRICK WALL)

(UTILITY–01,STORE–01)
TOTAL – 02

D4
2'9"x8'0"
(9" BRICK WALL)

(BEDROOM 1 –01
SERV.TOILET–01,BATH–01)
TOTAL – 03

D4
2'9"x8'0"
(4½" BRICK WALL)

(GUEST BED TOILET–01, MASTER BED TOILET–01)
TOTAL – 02

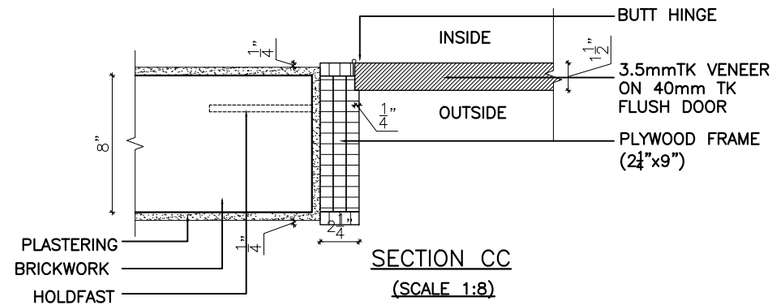

SECTION CC
(SCALE 1:8)

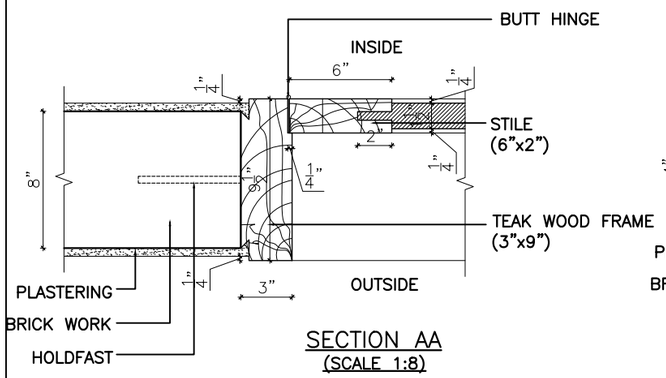

SECTION AA
(SCALE 1:8)

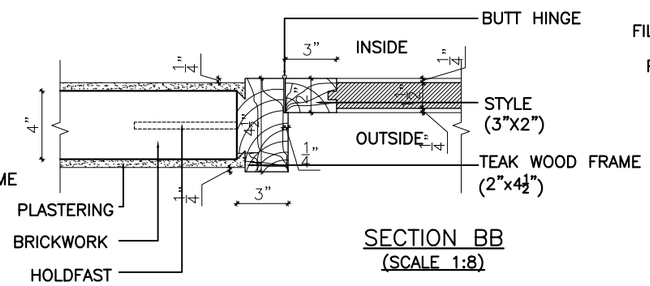

SECTION BB
(SCALE 1:8)

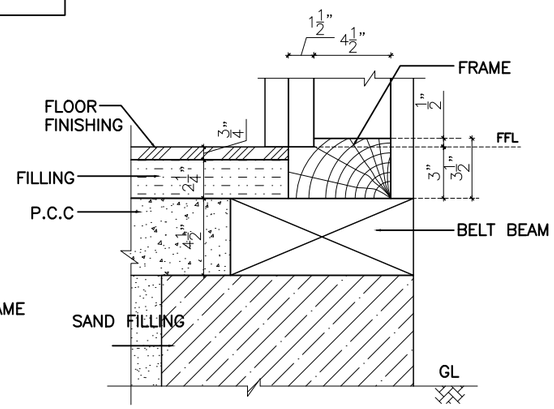

DETAIL X
(SCALE 1:8)

REV.NO	DESCRIPTION	CHKD	DATE

NOTE:

* ONLY WRITTEN DIMENSIONS ARE TO BE FOLLOWED
* ANY DISCREPENCIES NOTICED IN THE DRAWING SHALL BE BROUGHT TO OUR NOTICE IMMEDIATELY
* ALL LEVELS ARE WITH RESPECT TO FORMED GROUND LEVEL WHICH IS ASSUMED AS ± 0.00
* SILL Ht., MENTIONED ARE FROM FINSHED FLOOR LEVEL ONLY

CLIENT:
MR.MANOGHAR

PROJECT NAME:
HOUSING AT COIMBATORE

DRAWING TITLE:
JOINERY DETAIL

DATE 06.09.2022	PRO.CODE	DRAWN BY DOREEN S.
SCALE NTS	DWG.NO	CHECKED BY ARUN.P

ARUN AND ASSOCIATES
ARCHITECTS & PLANNERS
1289, TRICHY ROAD,
COIMBATORE – 641 018.

PRACTICAL TRAINING

JUNE 2022 - NOVEMBER 2022

MR. B.P. SHIVA RAM

RESIDENCE AT COIMBATORE

NAME : DOREEN GRACE SANTHOSH

REG NO : 39210021

ARUN & ASSOCIATES

1289,TRICHY ROAD,COIMBATORE-640018.

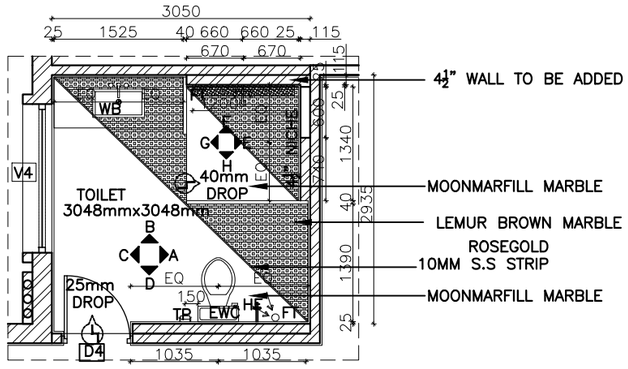

MASTER BATHROOM PLAN

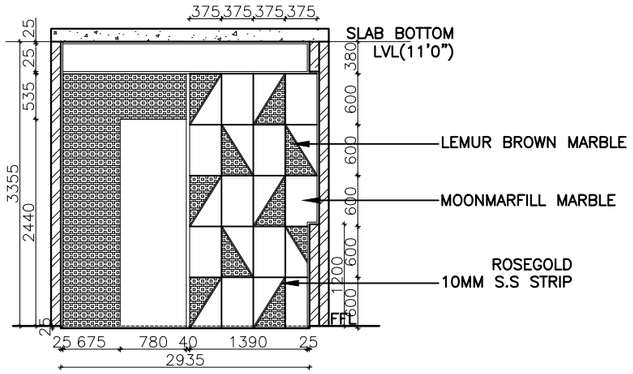

ELEVATION–A

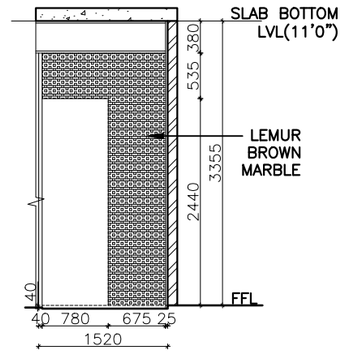

ELEVATION–G

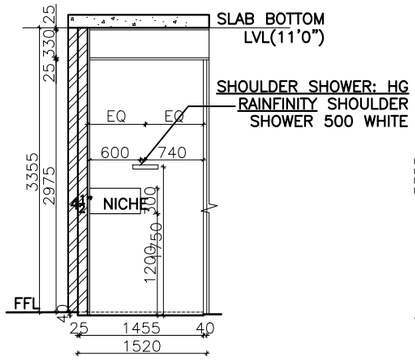

ELEVATION–E

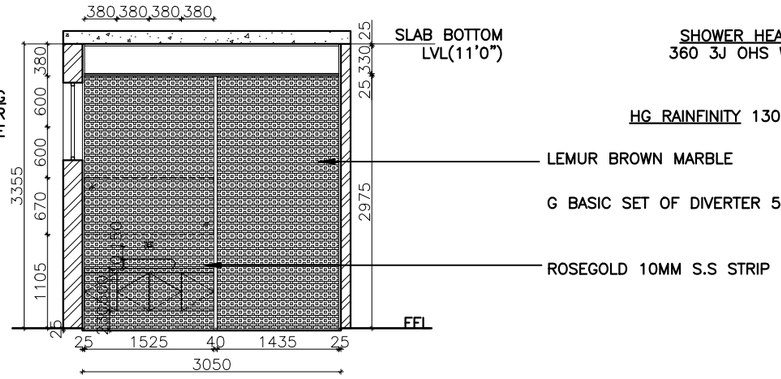

ELEVATION–B

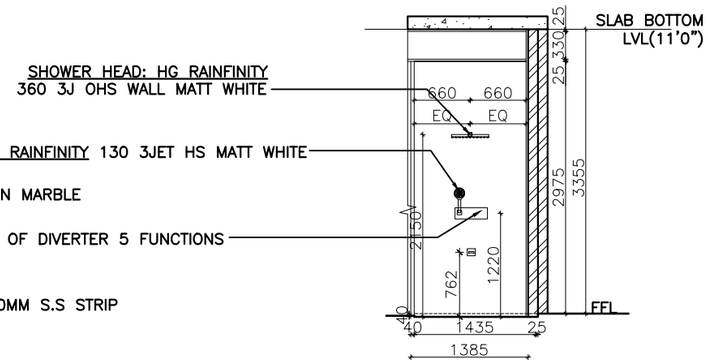

ELEVATION–F

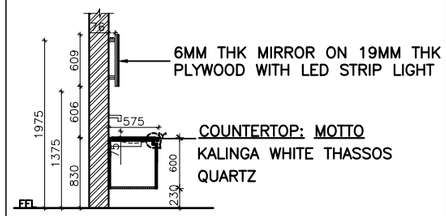

SECTION (TYPICAL)

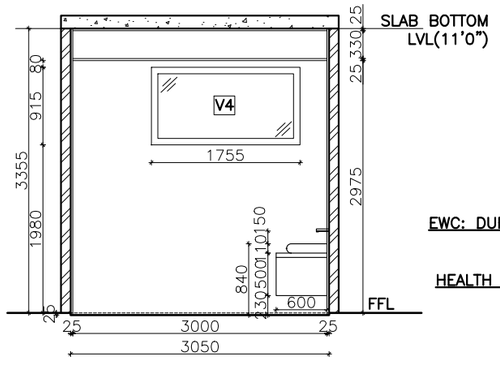

ELEVATION–C

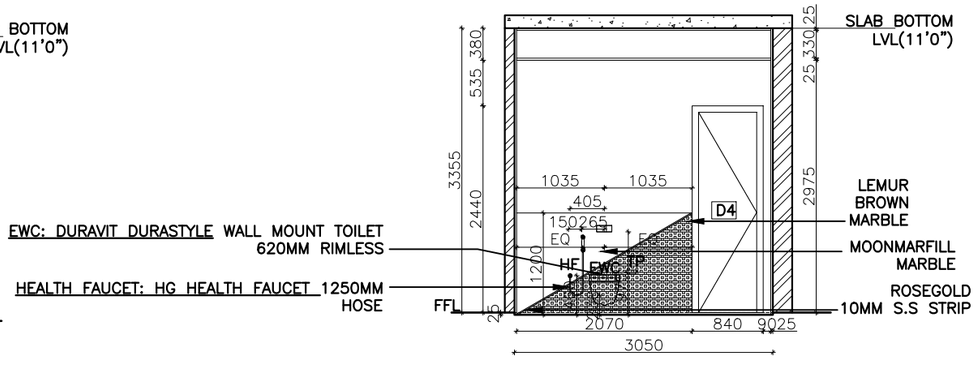

ELEVATION–D

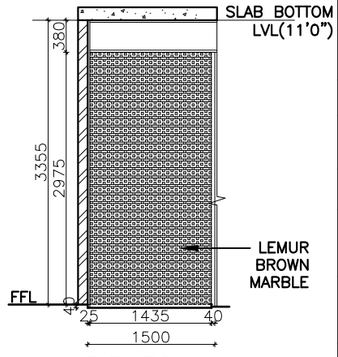

ELEVATION–H

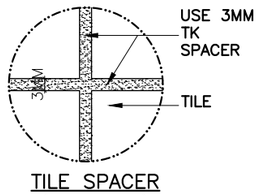

TILE SPACER
(DETAIL–B)

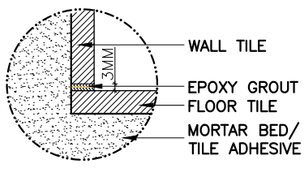

FLOOR AND WALL
TILE JUNCTION

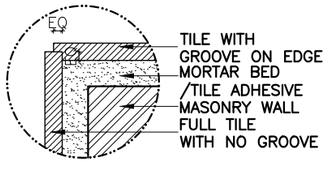

TILE 90° JUNCTION

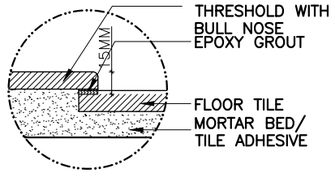

THRESHOLD TILE JUNCTION
(DETAIL–A)

This drawing is the property of ARUN AND ASSOCIATES (A&A) and shall not be passed on to any person not authorised by A&A to recieve it. It shall not be copied or modified in full or part without A&A's prior permission. The details furnished in this drawing are for this PROJECT only.

FLOOR TILE: NEXION: RUNA BEIGE
(1200MMX1200MM)
MATT FINISH

WALL TILE: SIMPOLO: ARMANISUN
(1200MMX1200MM)
GLOSSY FINISH

WALL TILE: SIMPOLO: ROYAL TAUPE
(1200MMX1200MM)
GLOSSY FINISH

NOTE:
KINDLY NOTE THAT ALL THE PLUMBING FITTING MARKINGS TO BE DONE AS PER THE VENDOR SPECIFICATION

THE FLOOR TILE LAYOUT SHOULD BE LAID SUCH THAT THE SPACERS MATCH WITH THE WALL

REVISIONS:

NO.	DESCRIPTION	CHECKED	DATE

CLIENT:
MR. B.P. SHIVA RAM

PROJECT NAME:
RESIDENCE AT COIMBATORE

DRAWING TITLE:
MASTER BATHROOM G.F MARBLE LAYOUT

DATE	DWG NO.	DRAWN BY
25.05.22	A2:01	KARUNESH
SCALE	PROJ CODE	CHECKED BY
1"=4'0"	RES–413–2020	ARUN P.

N

ARUN AND ASSOCIATES
ARCHITECTS & PLANNERS
1289, TRICHY ROAD,
COIMBATORE – 641 018.

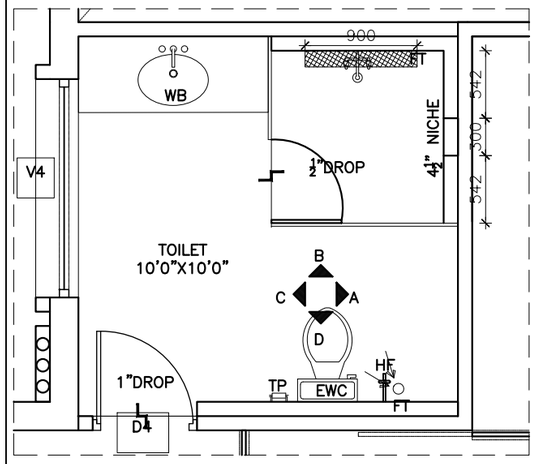

PART PLAN – TYP. MASTER BEDROOM TOILET

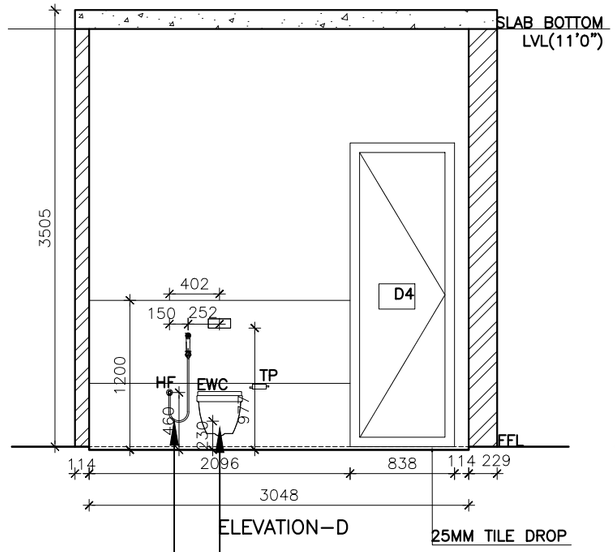

ELEVATION–D

EWC: SCARABEO MOON W/M CLEAN FLUSH WC ANTIQUE PINK 505X360MM

HEALTH FAUCET: HG HEALTH FAUCET 1250MM HOSE

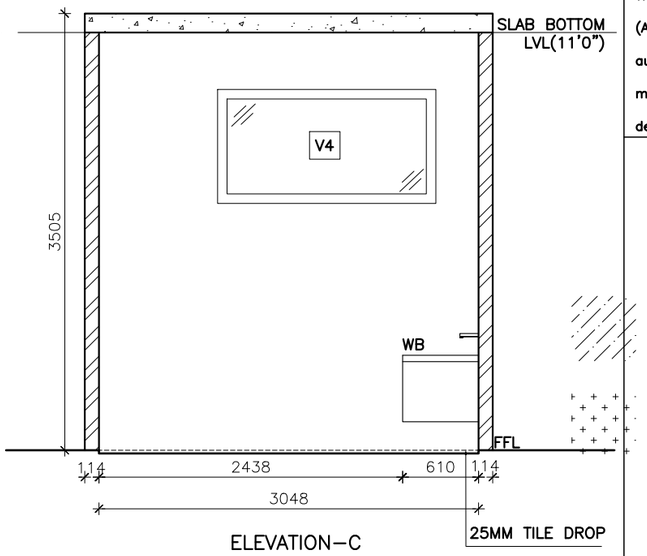

ELEVATION–C

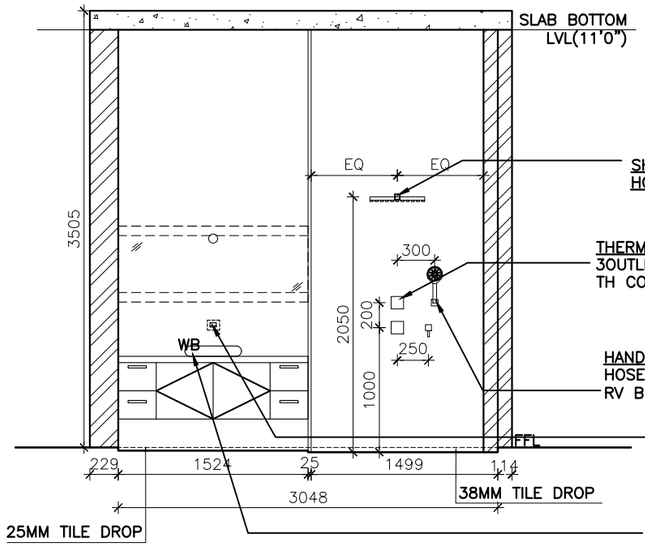

ELEVATION–B

SHOWER HEAD: HG RAINFINITY 360 3JET OHS HG IBOX WALL BRUSHED BRONZE

THERMOSTAT: HG AXOR SHOWER SELECT VALVE CONC 3OUTLET SOFTCUBE BBR + HG AXOR SHOWER SELECT TH CONC HIGHFLOW 1OUT SOFTCUBE BBR

HAND SHOWER: HG RAINFINITY 130 3JET HS BBR + HG ISIFLEX B SHOWER HOSE 1600MM BBR + HG FIXFIT SQUARE WALL OUTLET DN15 RV BBR + HG PORTER'S SHOWER SUPPORT BRUSHED BRONZE

BASIN MIXER: HG TALIS E BM SET CONC.FS LONG BBR

WASH BASIN: SCARABEO MOON 42 COUNTER TOP WASH BASIN ANTIQUE PINK 420X420XH400MM

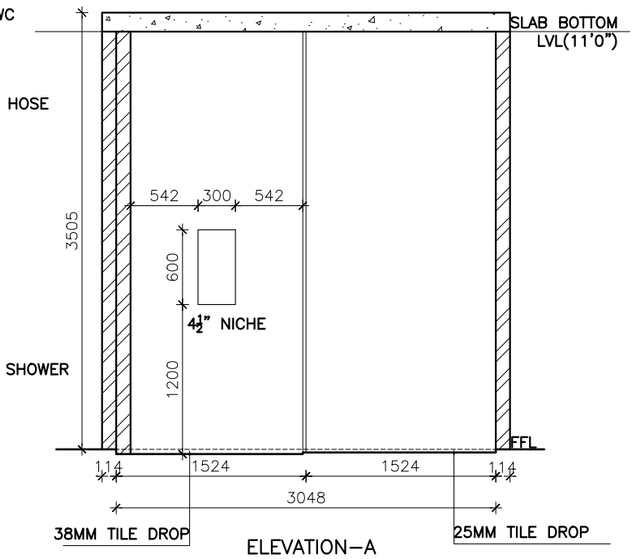

ELEVATION–A

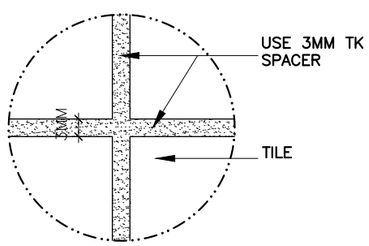

TILE SPACER (DETAIL–B)

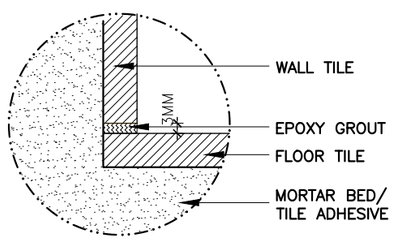

FLOOR AND WALL TILE JUNCTION

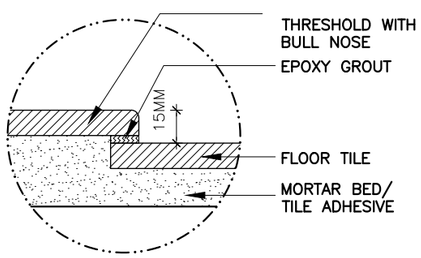

THRESHOLD TILE JUNCTION (DETAIL–A)

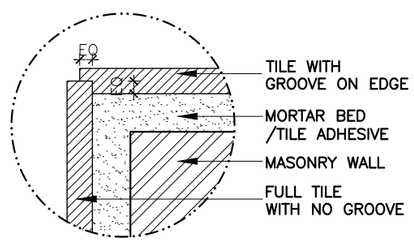

TILE 90° JUNCTION

This drawing is the property of ARUN AND ASSOCIATES (A&A) and shall not be passed on to any person not authorised by A&A to recieve it. It shall not be copied or modified in full or part without A&A's prior permission. The details furnished in this drawing are for this PROJECT only.

FLOOR TILE: NEXION:
RUNA BEIGE
(1200MMX1200MM)
MATT FINISH

WALL TILE: SIMPOLO:
ARMANISUN
(1200MMX1200MM)
GLOSSY FINISH

WALL TILE: SIMPOLO:
ROYAL TAUPE
(1200MMX1200MM)
GLOSSY FINISH

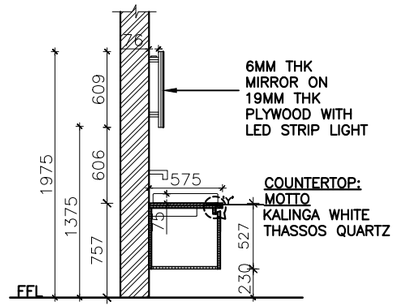

SECTION (TYPICAL)

THE FLOOR TILE LAYOUT SHOULD BE LAID SUCH THAT THE SPACERS MATCH WITH THE WALL

NOTE:
KINDLY NOTE THAT ALL THE PLUMBING FITTING MARKINGS TO BE DONE AS PER THE VENDOR SPECIFICATION

REVISIONS:

NO.	DESCRIPTION	CHECKED	DATE

CLIENT:
MR. B.P. SHIVA RAM

PROJECT NAME:
RESIDENCE AT COIMBATORE

DRAWING TITLE:
TYP. TOILET – MASTER BEDROOM

DATE	DWG NO.	DRAWN BY
25.05.22	A2:01	KEERTHIKA M
SCALE	PROJ CODE	CHECKED BY
1"=4'0"	RES–413–2020	ARUN P.

N

ARUN AND ASSOCIATES
ARCHITECTS & PLANNERS
1289, TRICHY ROAD,
COIMBATORE – 641 018.

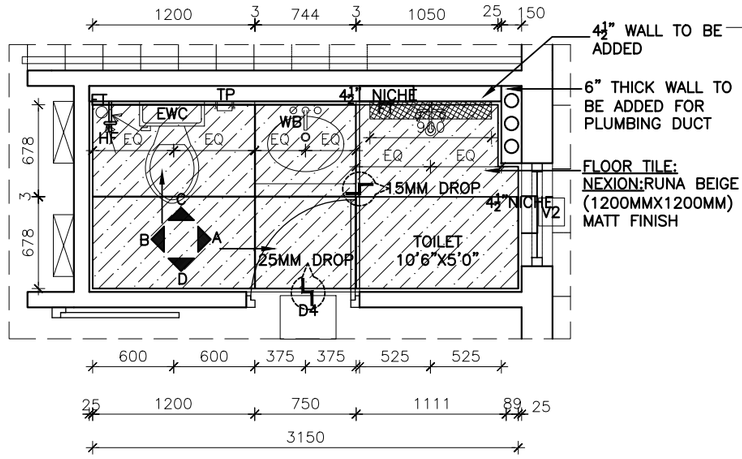

PART PLAN –MOTHER'S BEDROOM TOILET AT GROUND FLOOR

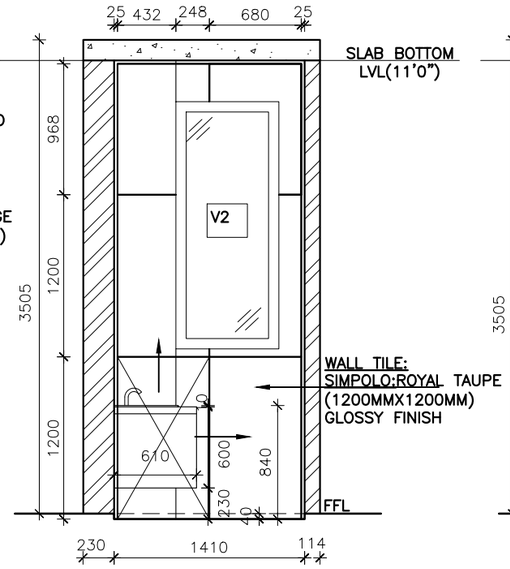

ELEVATION–A

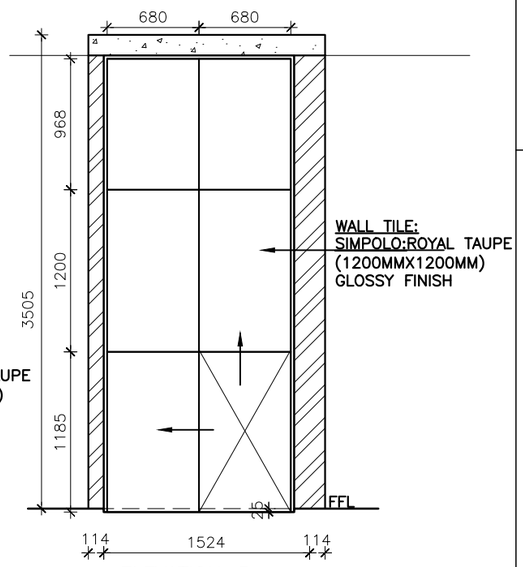

ELEVATION–B

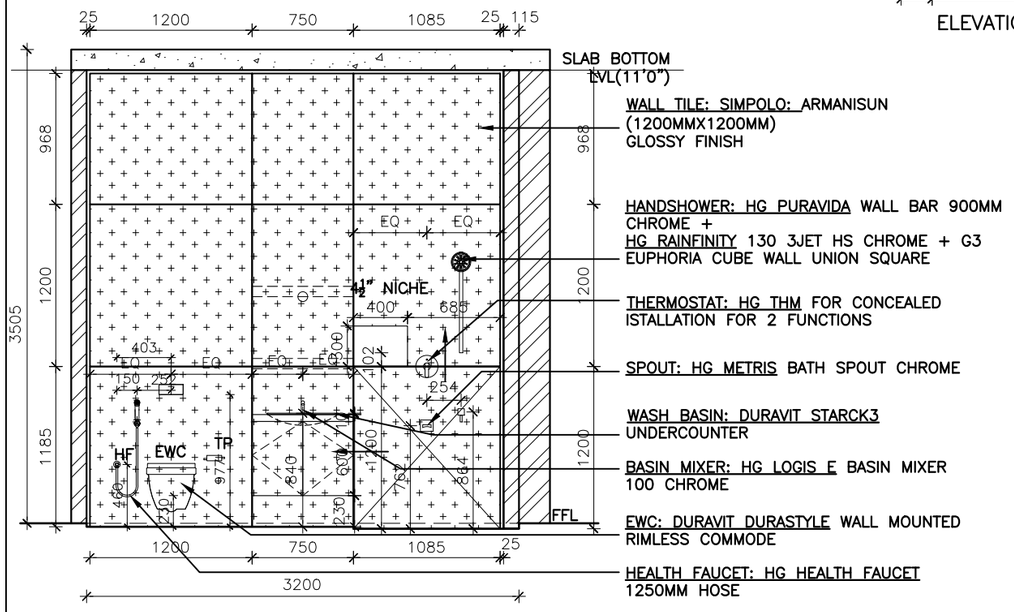

ELEVATION–C

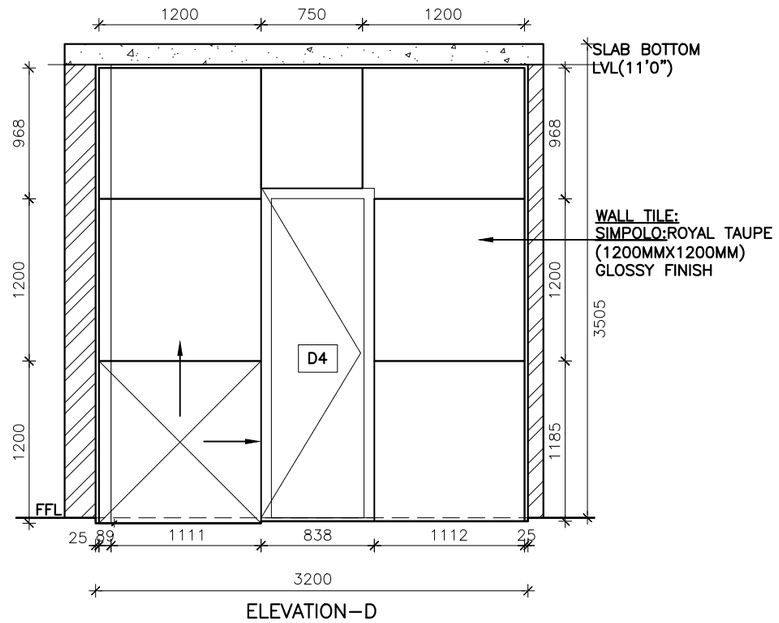

ELEVATION–D

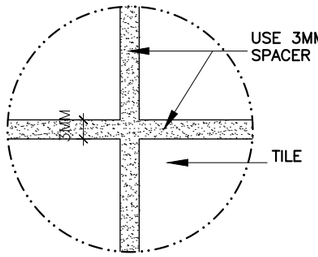

TILE SPACER (DETAIL–B)

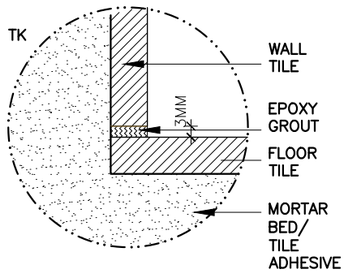

FLOOR AND WALL TILE JUNCTION

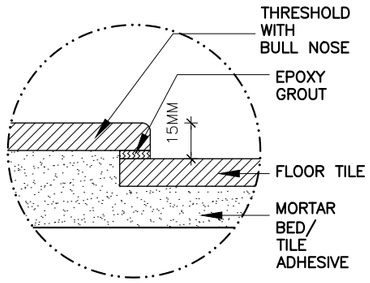

THRESHOLD TILE JUNCTION (DETAIL–A)

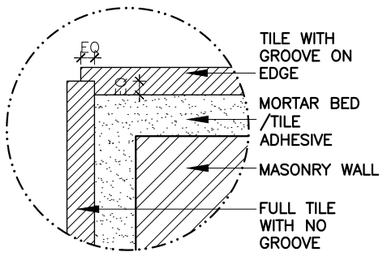

TILE 90° JUNCTION

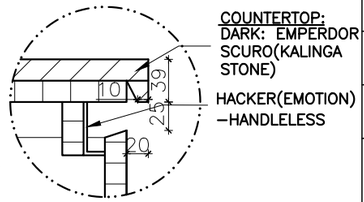

DETAIL 'Y'

This drawing is the property of ARUN AND ASSOCIATES (A&A) and shall not be passed on to any person not authorised by A&A to recieve it. It shall not be copied or modified in full or part without A&A's prior permission. The details furnished in this drawing are for this PROJECT only.

FLOOR TILE:
NEXION:RUNA BEIGE
(1200MMX1200MM)
MATT FINISH

WALL TILE:
SIMPOLO:ARMANISUN
(1200MMX1200MM)
GLOSSY FINISH

WALL TILE:
SIMPOLO:ROYAL TAUPE
(1200MMX1200MM)
GLOSSY FINISH

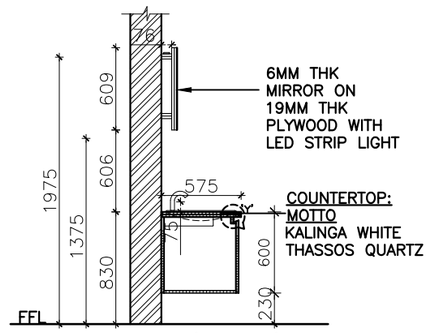

SECTION (TYPICAL)

NOTE:
KINDLY NOTE THAT ALL THE PLUMBING FITTING MARKINGS TO BE DONE AS PER THE VENDOR SPECIFICATION

REVISIONS:

NO.	DESCRIPTION	CHECKED	DATE

CLIENT:
MR. B.P. SHIVA RAM

PROJECT NAME:
RESIDENCE AT COIMBATORE

DRAWING TITLE:
MOTHER'S BEDROOM TOILET

DATE	DWG NO.	DRAWN BY	N
25.05.22	A2:01	KEERTHIKA M	
SCALE	PROJ CODE	CHECKED BY	
1"=4'0"	RES–413–2020	ARUN P.	

ARUN AND ASSOCIATES
ARCHITECTS & PLANNERS
1289, TRICHY ROAD,
COIMBATORE – 641 018.

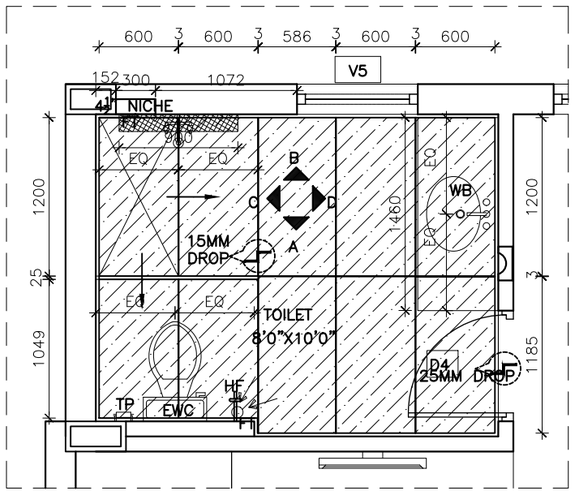

PART PLAN – KIDS BEDROOM TOILET FIRST FLOOR

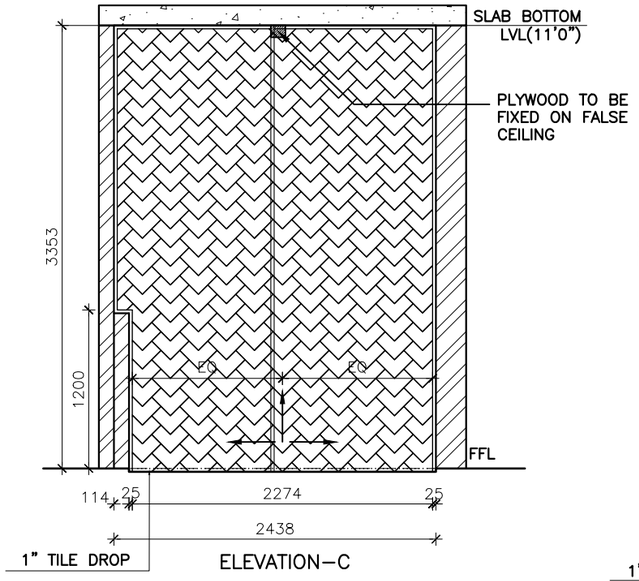

ELEVATION–C

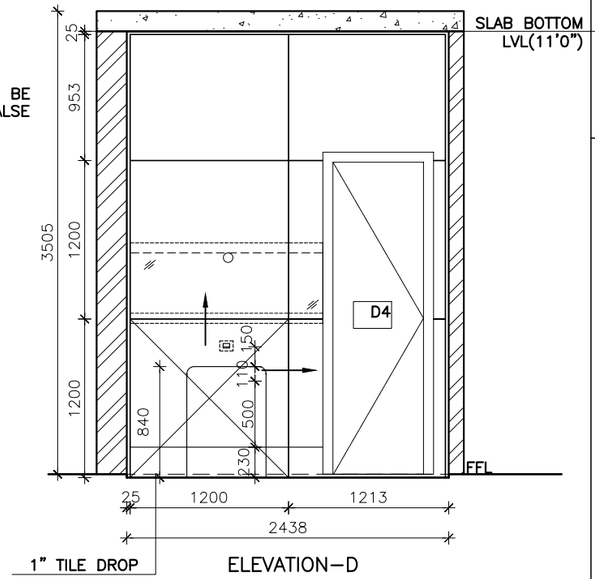

ELEVATION–D

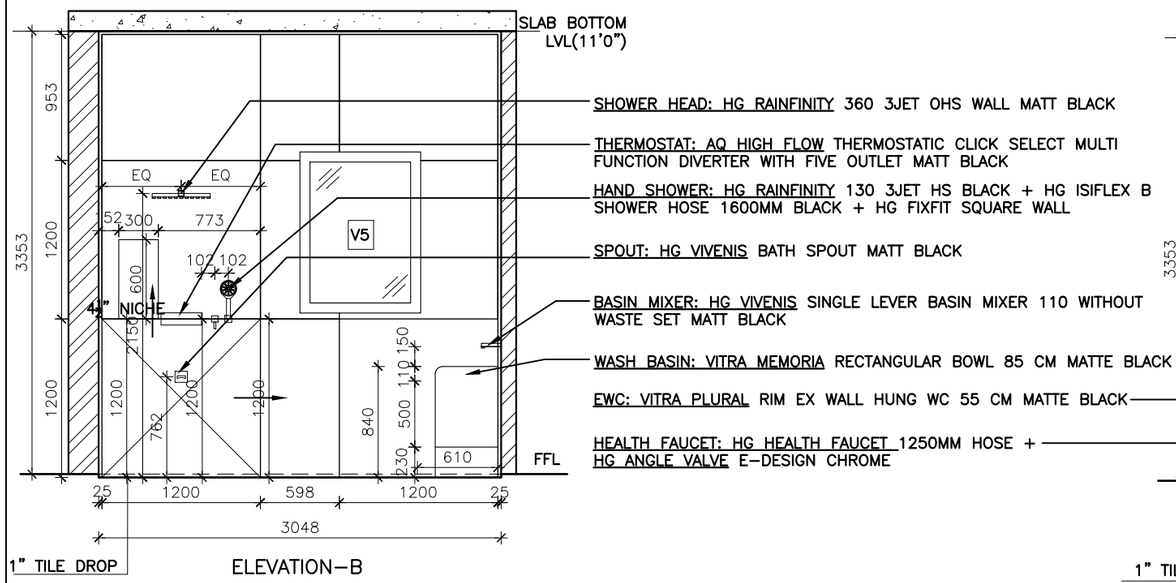

ELEVATION–B

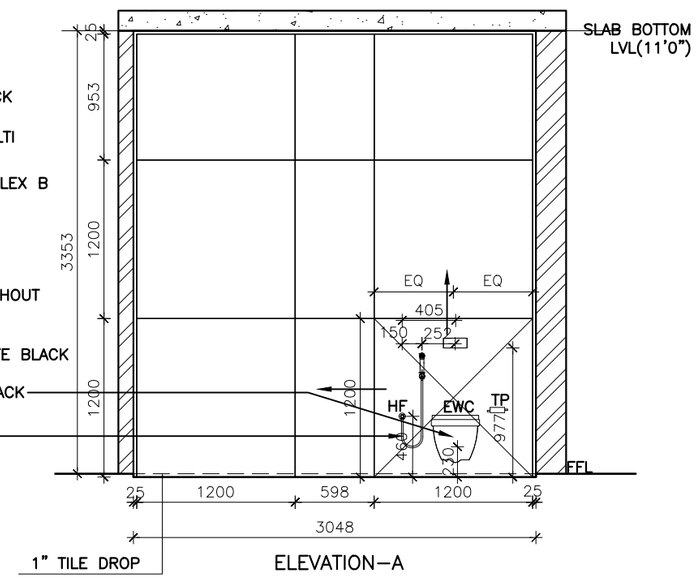

ELEVATION–A

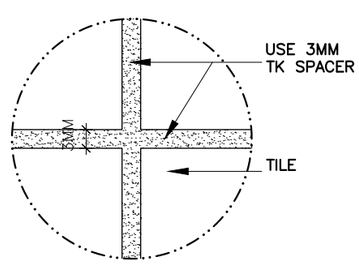

TILE SPACER (DETAIL–B)

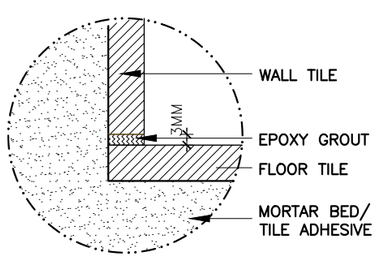

FLOOR AND WALL TILE JUNCTION

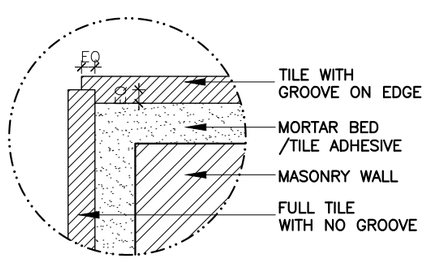

TILE 90° JUNCTION

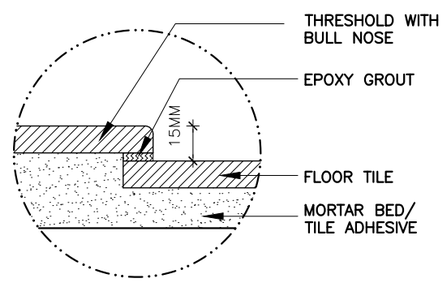

THRESHOLD TILE JUNCTION (DETAIL–A)

This drawing is the property of ARUN AND ASSOCIATES (A&A) and shall not be passed on to any person not authorised by A&A to recieve it. It shall not be copied or modified in full or part without A&A's prior permission. The details furnished in this drawing are for this PROJECT only.

FLOOR TILE: NEXION:
RUNA BEIGE
(1200MMX1200MM)
MATT FINISH

WALL TILE: SIMPOLO:
ARMANISUN
(1200MMX1200MM)
GLOSSY FINISH

WALL TILE: SIMPOLO:
ROYAL TAUPE
(1200MMX1200MM)
GLOSSY FINISH

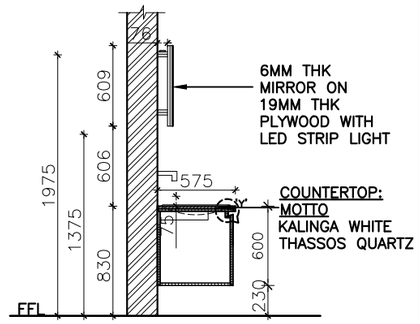

SECTION (TYPICAL)

THE FLOOR TILE LAYOUT SHOULD BE LAID SUCH THAT THE SPACERS MATCH WITH THE WALL

NOTE:
KINDLY NOTE THAT ALL THE PLUMBING FITTING MARKINGS TO BE DONE AS PER THE VENDOR SPECIFICATION

REVISIONS:

NO.	DESCRIPTION	CHECKED	DATE

CLIENT:
MR. B.P. SHIVA RAM

PROJECT NAME:
RESIDENCE AT COIMBATORE

DRAWING TITLE:
KIDS BEDROOM TOILET 2 – DRUTI

DATE	DWG NO.	DRAWN BY
1.06.22	A2:01	KEERTHIKA M
SCALE	PROJ CODE	CHECKED BY
1"=4'0"	RES–413–2020	ARUN P.

N

ARUN AND ASSOCIATES
ARCHITECTS & PLANNERS
1289, TRICHY ROAD,
COIMBATORE – 641 018.

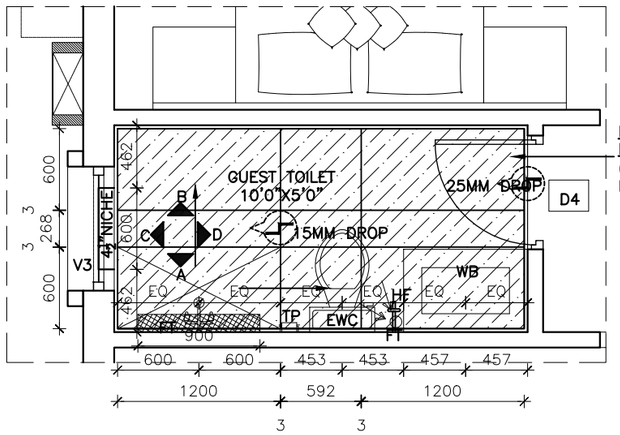

PART PLAN – GUEST BEDROOM TOILET AT BASEMENT FLOOR

FLOOR TILE:
NEXION:ENDLESS TAUPE
(1200MMX600MM)
MATT FINISH

WALL TILE:
LIOLI:ONICE BIANCO
(1200MMX600MM)
GLOSSY FINISH

WALL TILE:
LIOLI:STRATUM PORTORO
(1200MMX600MM)
MATT FINISH

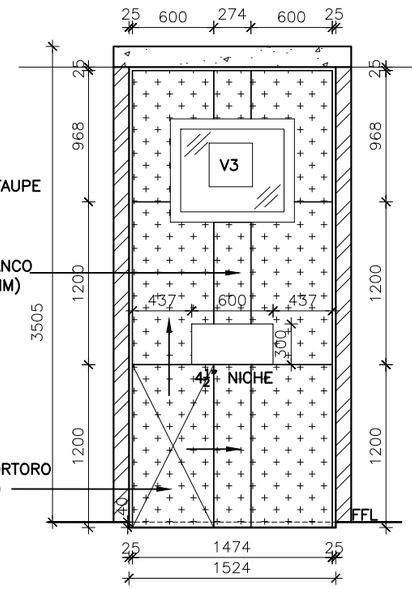

ELEVATION–C

SLAB BOTTOM
LVL(11'0")

WALL TILE:
LIOLI:ONICE BIANCO
(1200MMX600MM)
GLOSSY FINISH

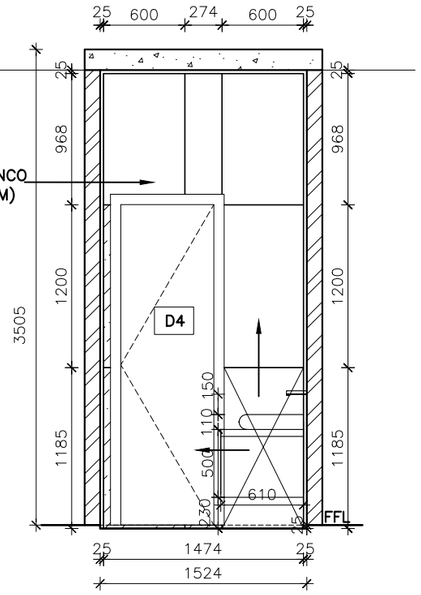

ELEVATION–D

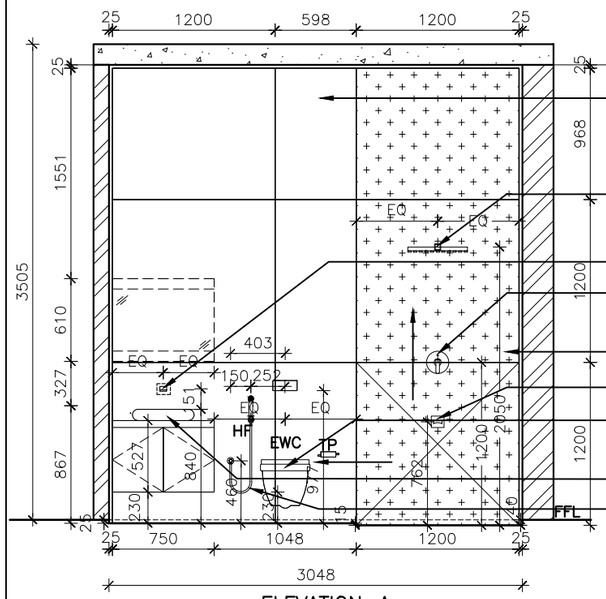

ELEVATION–A

SLAB BOTTOM
LVL(11'0")

WALL TILE: LIOLI:ONICE BIANCO (1200MMX600MM)
GLOSSY FINISH

SHOWER HEAD: HG VERNIS BLEND SHOWER ARM
240 CHROME + HG VERNIS SHAP OH SHOWER 1JET
230X170 MM

BASIN MIXER: HG VERNIS SHAP 2 HOLE BASIN MIXER

THERMOSTAT: HG VERNIS BATH MIXER BASIC SET

WALL TILE: LIOLI:STRATUM PORTORO (1200MMX600MM)
MATT FINISH

SPOUT: HG VERNIS BATH SPOUT

EWC: DURAVIT DURASTYLE WALL MOUNTED COMMODE

WASH BASIN: BLACK/WHITE CHOSEN
FROM DISPLAY

HEALTH FAUCET: SCHELL HEALTH FAUCET SHINY 1000MM

WALL TILE: LIOLI:ONICE BIANCO (1200MMX600MM)
GLOSSY FINISH

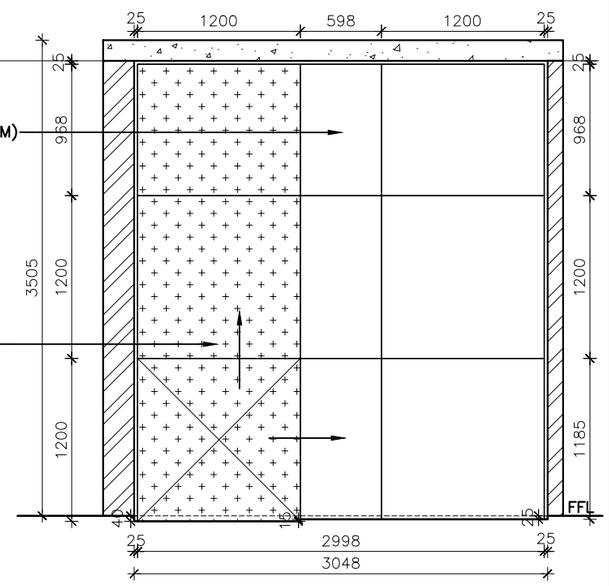

ELEVATION–B

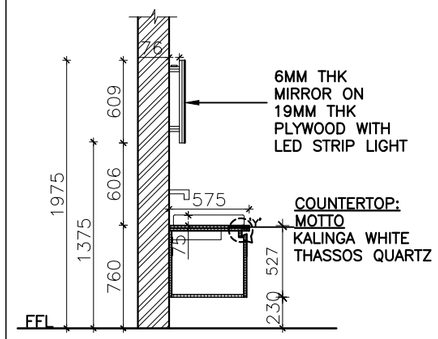

6MM THK
MIRROR ON
19MM THK
PLYWOOD WITH
LED STRIP LIGHT

COUNTERTOP:
MOTTO
KALINGA WHITE
THASSOS QUARTZ

SECTION (TYPICAL)

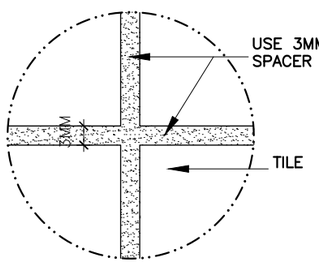

TILE SPACER
(DETAIL–B)

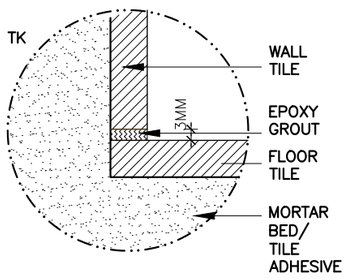

FLOOR AND WALL
TILE JUNCTION

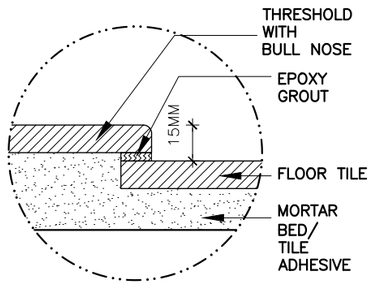

THRESHOLD TILE JUNCTION
(DETAIL–A)

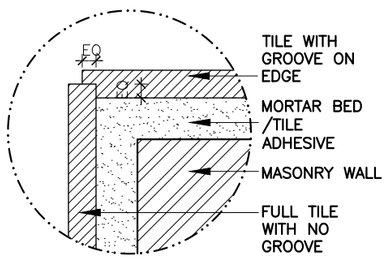

TILE 90° JUNCTION

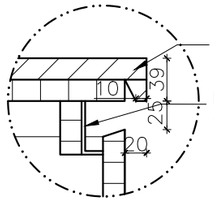

COUNTERTOP:
DARK: EMPERDOR
SCURO(KALINGA
STONE)

HACKER(EMOTION)
–HANDLELESS

DETAIL 'Y'

This drawing is the property of ARUN AND ASSOCIATES (A&A) and shall not be passed on to any person not authorised by A&A to recieve it. It shall not be copied or modified in full or part without A&A's prior permission. The details furnished in this drawing are for this PROJECT only.

FLOOR TILE:
NEXION:ENDLESS TAUPE
(1200MMX600MM)
MATT FINISH

WALL TILE:
LIOLI:STRATUM PORTORO
(1200MMX600MM)
MATT FINISH

WALL TILE:
LIOLI:ONICE BIANCO
(1200MMX600MM)
GLOSSY FINISH

NOTE:
KINDLY NOTE THAT ALL THE PLUMBING FITTING MARKINGS TO BE DONE AS PER THE VENDOR SPECIFICATION

REVISIONS:

NO.	DESCRIPTION	CHECKED	DATE

CLIENT:
MR. B.P. SHIVA RAM

PROJECT NAME:
RESIDENCE AT COIMBATORE

DRAWING TITLE:
GUEST BEDROOM TOILET– TILING LAYOUT

DATE	DWG NO.	DRAWN BY	N
25.05.22	A2:01	KEERTHIKA M	
SCALE	PROJ CODE	CHECKED BY	
1"=4'0"	RES–413–2020	ARUN P.	

ARUN AND ASSOCIATES
ARCHITECTS & PLANNERS
1289, TRICHY ROAD,
COIMBATORE – 641 018.

PRACTICAL TRAINING

JUNE 2022 - NOVEMBER 2022

MR. GURU PRASAD

RESIDENCE AT COIMBATORE

NAME : DOREEN GRACE SANTHOSH

REG NO : 39210021

ARUN & ASSOCIATES

1289,TRICHY ROAD,COIMBATORE-640018.

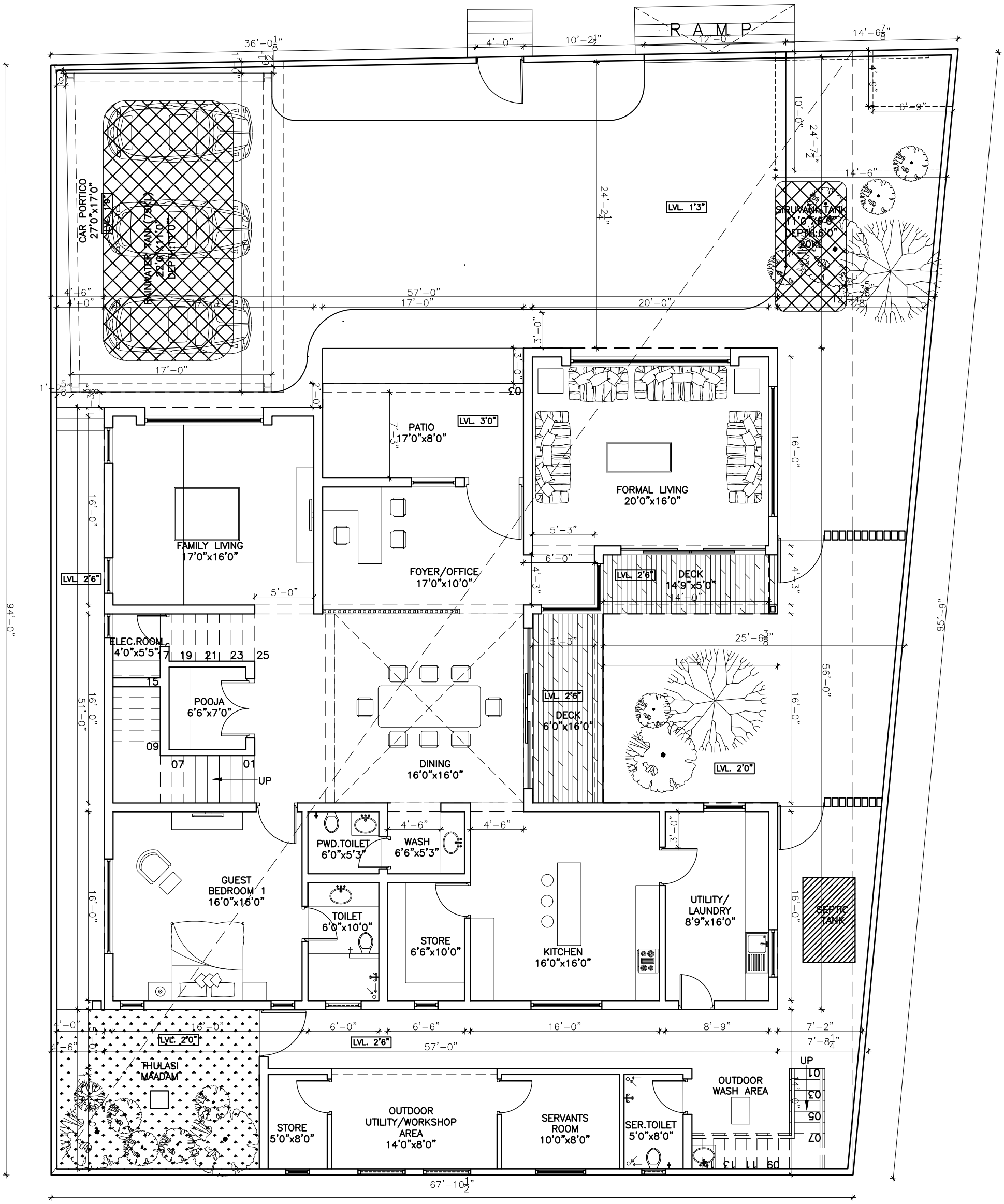

AREA DETAIL (IN SQ.FT.):	
GROUND FLOOR	2815.00 SQ.FT
CAR PARK	470.00 SQ FT
FIRST FLOOR	2624.00 SQ.FT
TOTAL BUILDING AREA	5910.00 SQ FT
OUTHOUSE:	330.00 SQ FT
TOTAL BUILT-UP AREA	6240.00 SQ FT
DECK AREA: (ALREADY INCLUDED IN THE FLOOR AREA)	265.00 SQ FT

FOR REFERENCE ONLY

STAIRCASE DETAILS:
NO.OF STEPS : 25
THREAD WIDTH : 1'0"
RISER HEIGHT : 6"

CLIENT: MR.GURU PRASAD

PROJECT NAME: RESIDENCE AT COIMBATORE

DRAWING TITLE: GROUND FLOOR PLAN

DATE	DWG NO.	DRAWN BY
10.01.22	A2:01	JEREMIAH.D
SCALE	PROJ CODE	CHECKED BY
1"=8'0"	RES-475-2021	ARUN P.

N

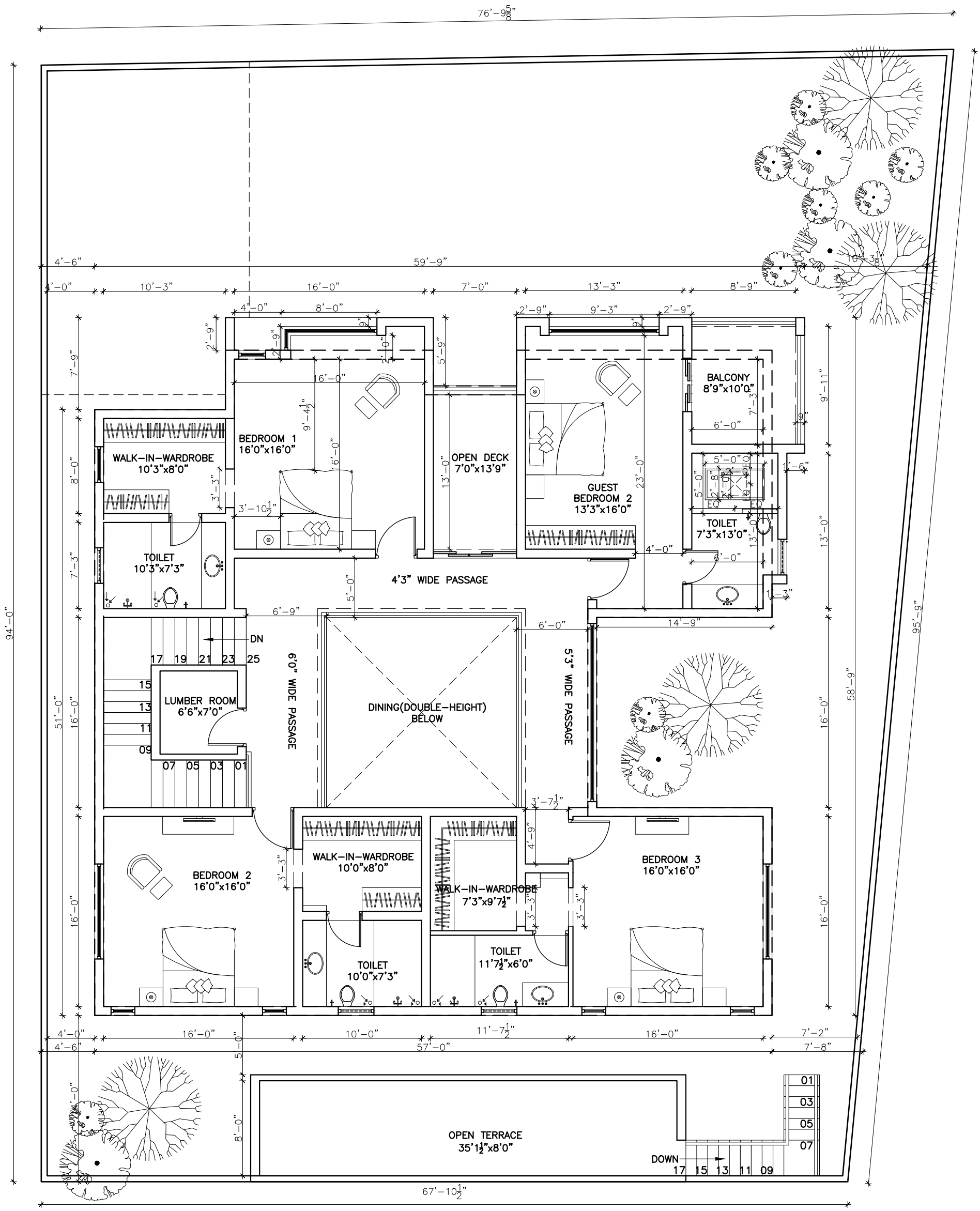

AREA DETAIL (IN SQ.FT.):	
GROUND FLOOR	2815.00 SQ.FT
CAR PARK	470.00 SQ FT
FIRST FLOOR	2624.00 SQ.FT
TOTAL BUILDING AREA	5910.00 SQ FT
OUTHOUSE:	330.00 SQ FT
TOTAL BUILT-UP AREA	6240.00 SQ FT
DECK AREA: (ALREADY INCLUDED IN THE FLOOR AREA)	265.00 SQ FT

FOR REFERENCE ONLY

STAIRCASE DETAILS:
NO.OF STEPS : 25
THREAD WIDTH : 1'0"
RISER HEIGHT : 6"

CLIENT: MR.GURU PRASAD

PROJECT NAME: RESIDENCE AT COIMBATORE

DRAWING TITLE: FIRST FLOOR PLAN

DATE	DWG NO.	DRAWN BY
31.10.22	A2:01	JEREMIAH D
SCALE	PROJ CODE	CHECKED BY
1"=8'0"	RES-475-2021	ARUN P.

N

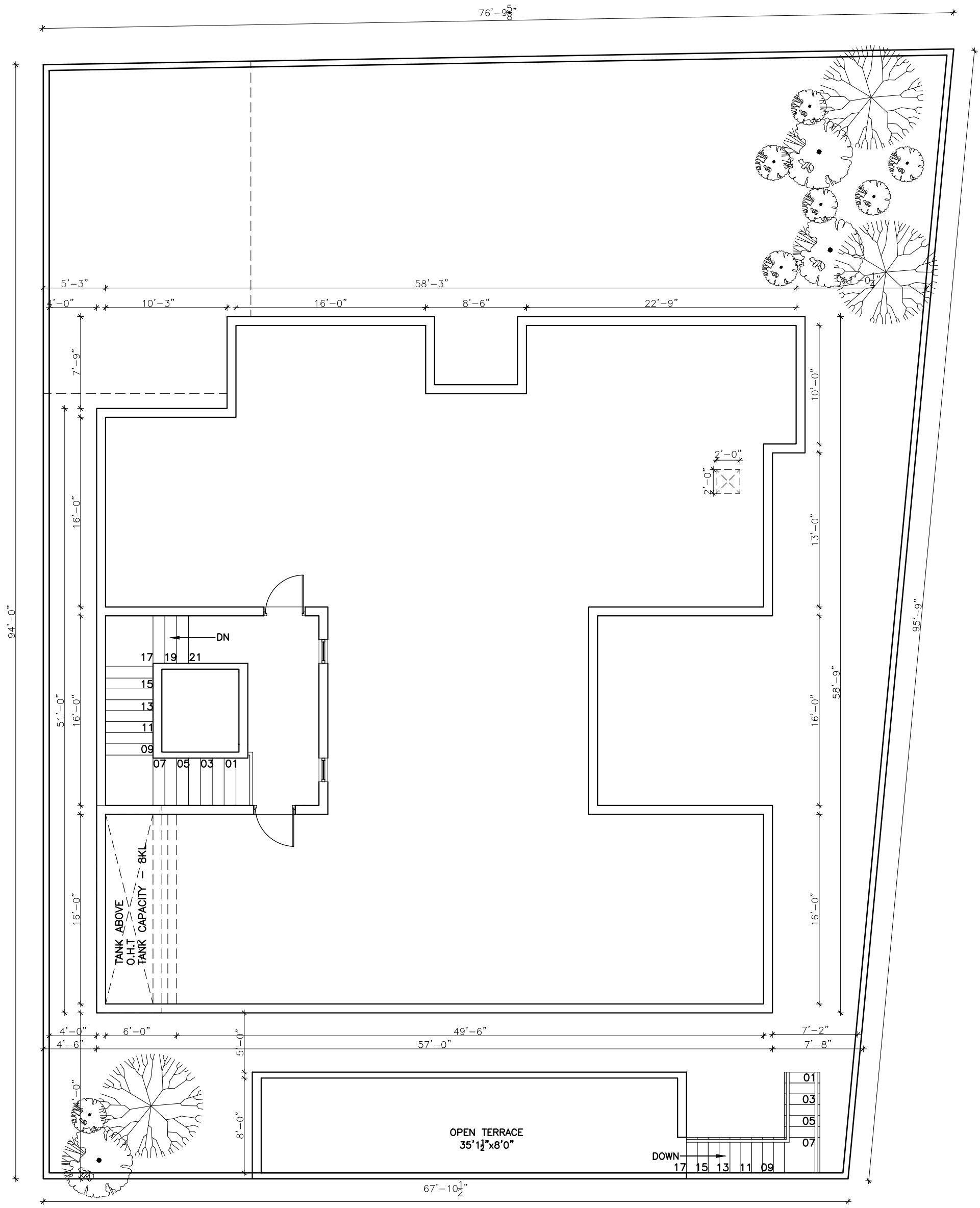

AREA DETAIL (IN SQ.FT.):	
GROUND FLOOR	2815.00 SQ.FT
CAR PARK	470.00 SQ FT
FIRST FLOOR	2624.00 SQ.FT
TOTAL BUILDING AREA	5910.00 SQ FT
OUTHOUSE:	330.00 SQ FT
TOTAL BUILT-UP AREA	6240.00 SQ FT
DECK AREA: (ALREADY INCLUDED IN THE FLOOR AREA)	265.00 SQ FT

STAIRCASE DETAILS:
NO.OF STEPS : 25
THREAD WIDTH : 1'0"
RISER HEIGHT : 6"

CLIENT:
MR.GURU PRASAD

PROJECT NAME:
RESIDENCE AT COIMBATORE

DRAWING TITLE:
TERRACE FLOOR PLAN

DATE	DWG NO.	DRAWN BY
5.11.22	A2:01 •	DOREEN S.
SCALE	PROJ CODE	CHECKED BY
1"=8'0"	RES-475-2021	ARUN P.

N

This drawing is the property of ARUN AND ASSOCIATES (A&A) and shall not be passed on to any person not authorised by A&A to recieve it. It shall not be copied or modified in full or part without A&A's prior permission. The details furnished in this drawing are for this PROJECT only.

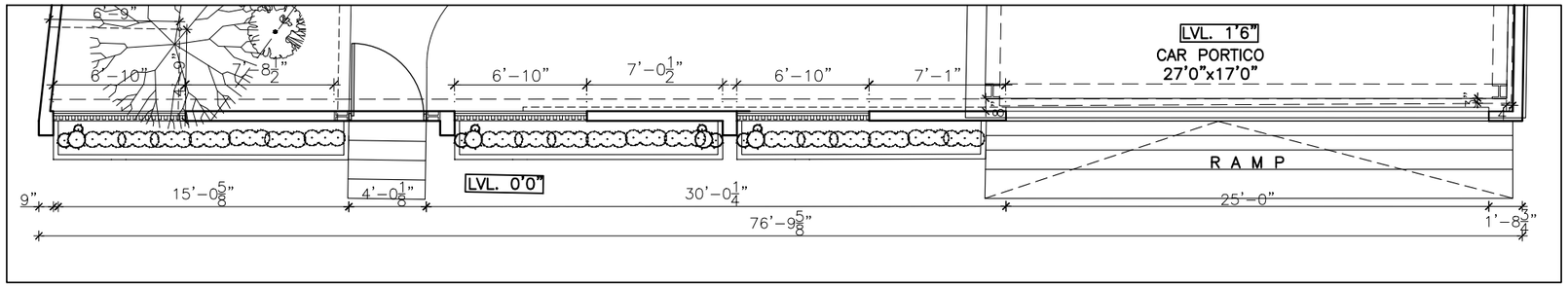

PART PLAN – COMPOUND WALL

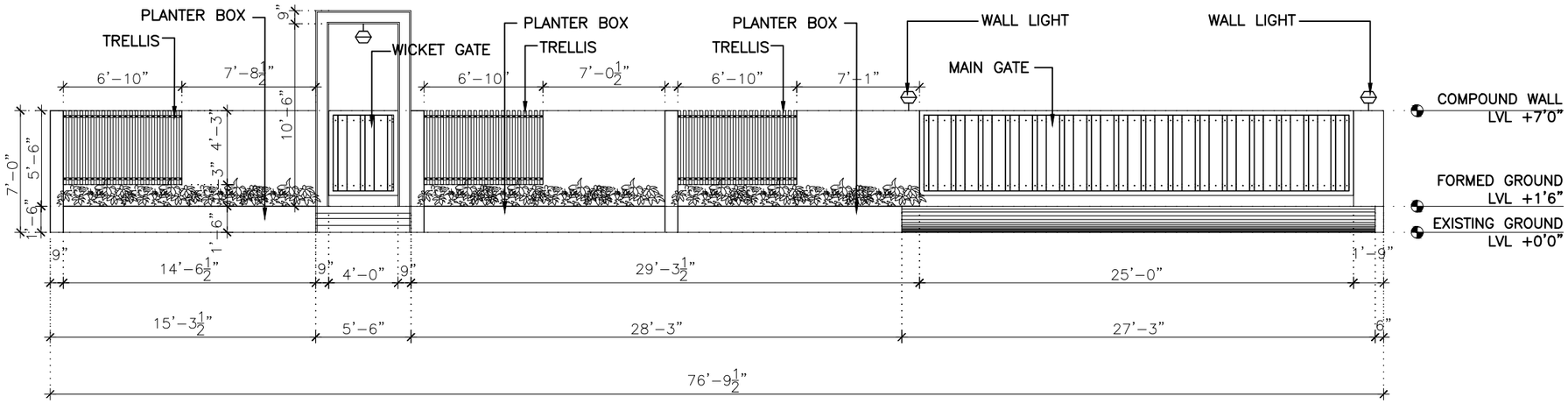

COMPOUND WALL ELEVATION

CLIENT:
MR. GURU PRASAD

PROJECT NAME:
RESIDENCE AT COIMBATORE

DRAWING TITLE:
COMPOUND WALL – ELEVATION

DATE	DWG NO.	DRAWN BY
29.09.22	A2:01	DOREEN S
SCALE	PROJ CODE	CHECKED BY
1"=6'0"	RES–475–2021	ARUN P.

N

ARUN AND ASSOCIATES
ARCHITECTS & PLANNERS
1289, TRICHY ROAD,
COIMBATORE – 641 018.

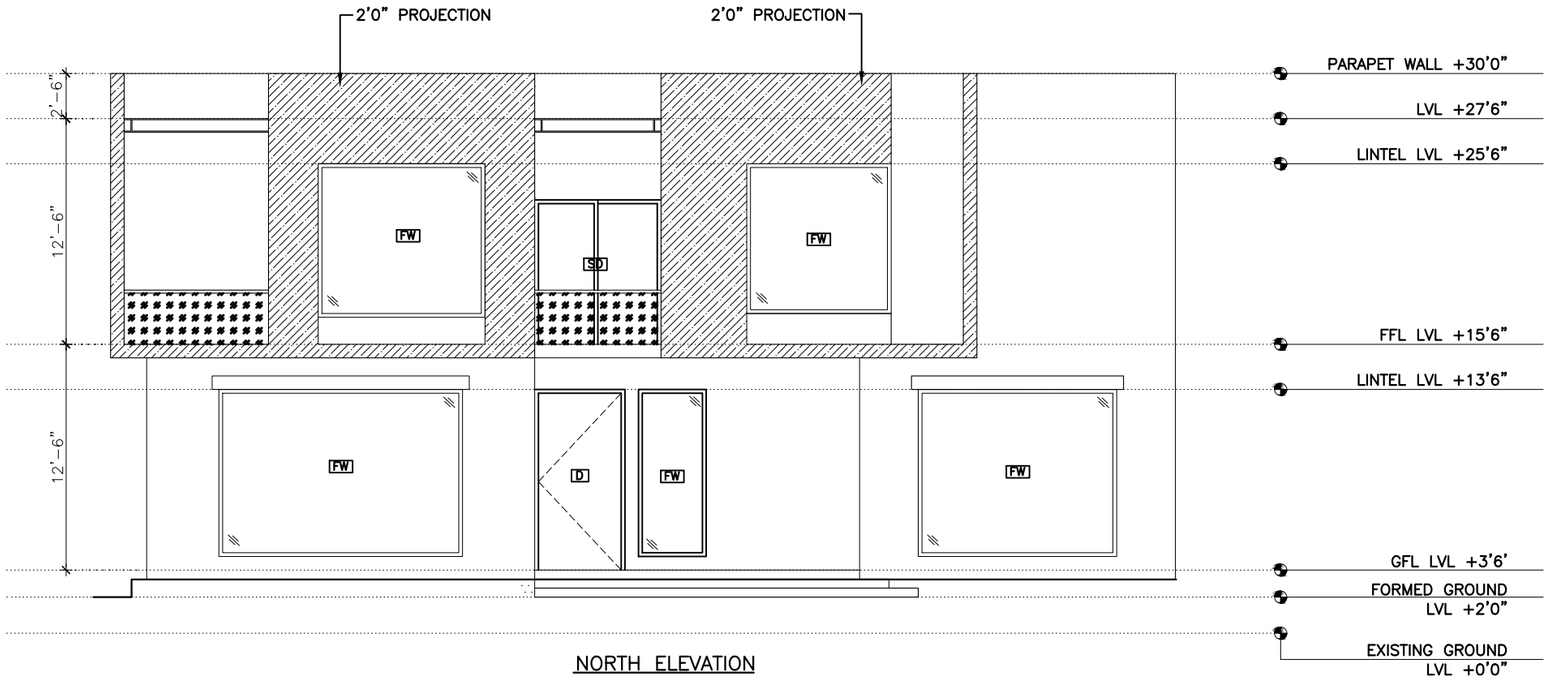

NORTH ELEVATION

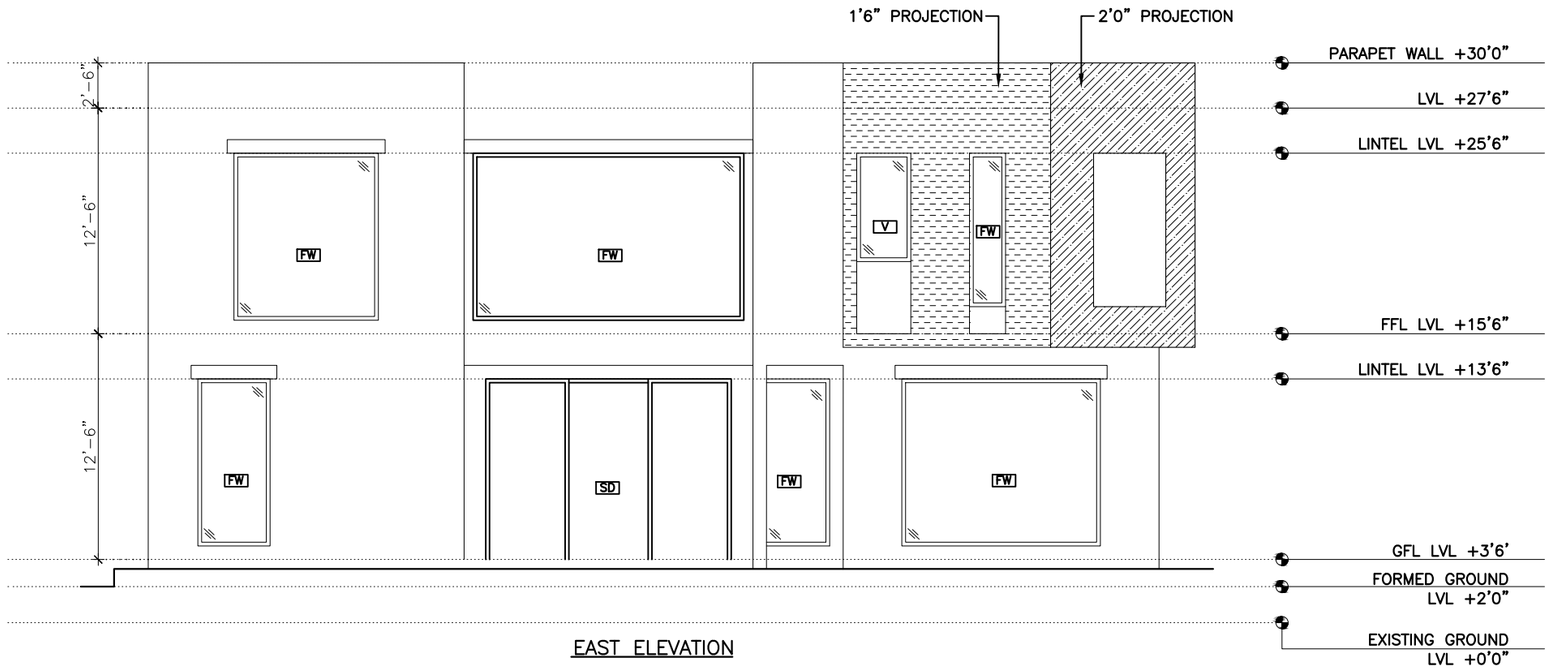

EAST ELEVATION

This drawing is the property of ARUN AND ASSOCIATES (A&A) and shall not be passed on to any person not authorised by A&A to recieve it. It shall not be copied or modified in full or part without A&A's prior permission. The details furnished in this drawing are for this PROJECT only.

CLIENT:
MR.GURU PRASAD

PROJECT NAME:
RESIDENCE AT COIMBATORE

DRAWING TITLE:
ELEVATION

DATE	DWG NO.	DRAWN BY	N
27.10.22	A2:01	DOREEN S.	
SCALE	PROJ CODE	CHECKED BY	
1"=6'0"	RES-475-2021	ARUN P.	

ARUN AND ASSOCIATES
ARCHITECTS & PLANNERS
1289, TRICHY ROAD,
COIMBATORE - 641 018.

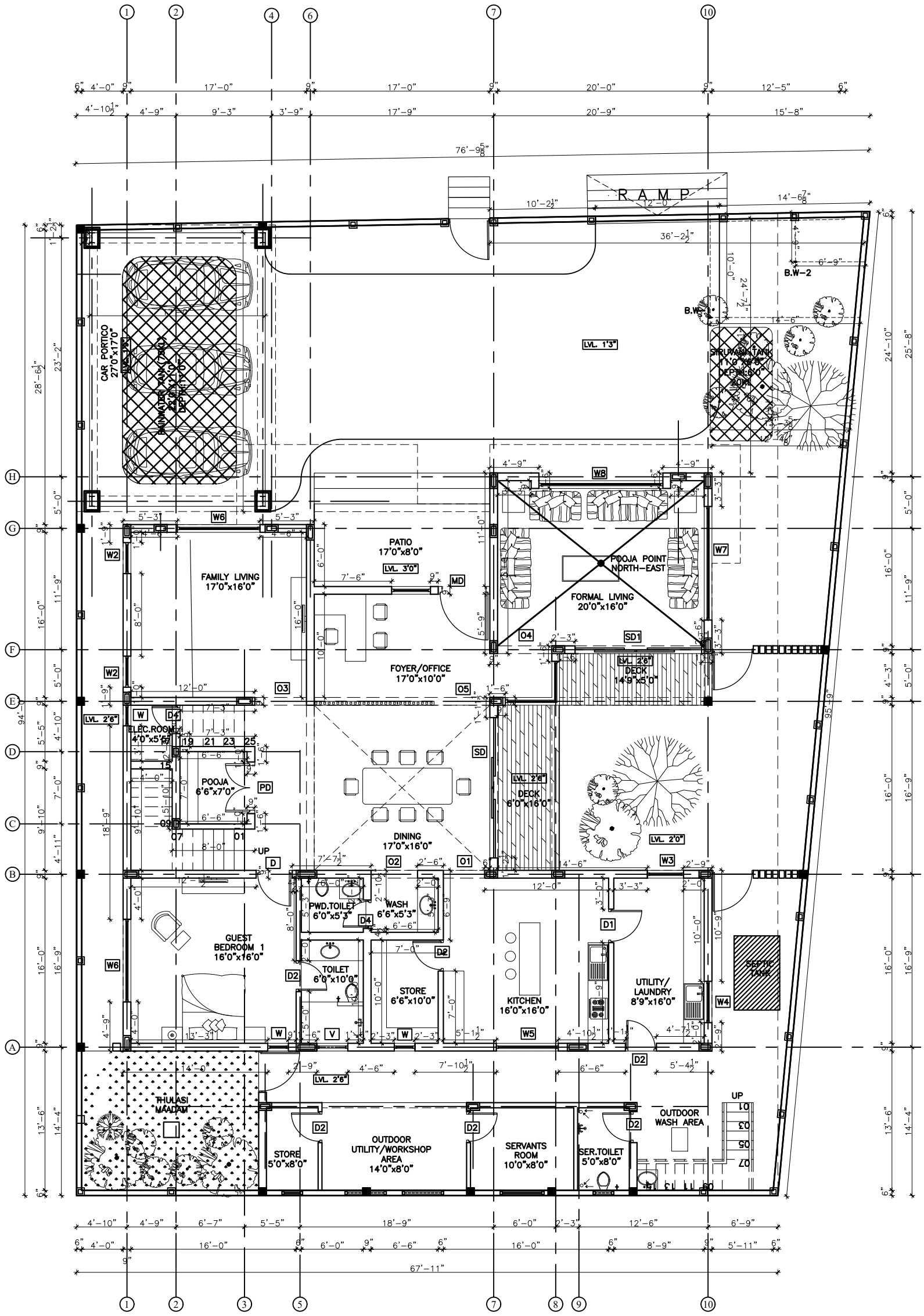

This drawing is the property of ARUN AND ASSOCIATES (A&A) and shall not be passed on to any person not authorised by A&A to recieve it. It shall not be copied or modified in full or part without A&A's prior permission. The details furnished in this drawing are for this PROJECT only.

JOINERY DETAIL:

S.NO	TYPE	SIZE	SILL Lvl	GF	FF	TF	ANC
WINDOWS:							
01.	W	2'0"x	2'6"	3	2	2	–
02.	W1	2'3"x	2'6"	–	2	–	–
03.	W2	3'0"x	2'6"	2	1	–	–
04.	W3	3'6"x	2'6"	1	–	–	–
05.	W4	4'0"x	2'6"	1	–	–	–
06.	W5	6'0"x	2'6"	1	–	–	–
07.	W6	8'0"x	2'6"	2	2	–	–
08.	W7	11'0"x	2'6"	1	–	–	–
09.	W8	12'0"x	2'6"	1	–	–	–
OPENINGS:							
10.	O	3'3"x	–	–	4	–	–
11.	O1	4'0"x	–	1	–	–	–
12.	O2	4'6"x	–	1	–	–	–
13.	O3	5'0"x	–	1	–	–	–
14.	O4	5'3"x	–	1	–	–	–
DOORS:							
15.	MD	5'0"x	–	1	–		
16.	PD	5'0"x	–	1	–		
17.	D	3'6"x	–	1	4		
18.	D1	3'3"x	–	1	–		
19.	D2	3'0"x	–	3	2		
20.	D3	2'11"x	–	–	1		
21.	D4	2'9"x	–	2	1		
22.	SD	13'7"x	–	1	–		
23.	SD1	12'3"x	–	1	–		
24.	SD2	7'0"x	–	–	1		
25.	SD3	4'6"x	–	–	1		
VENTILATOR:							
26.	V	3'0"x	–	1	4	–	–

AREA DETAILS

GROUND FLOOR AREA	2327.48 SQ.FT
PARKING AREA	459 SQ.FT
TOTAL GROUND FLOOR AREA	2786.48 SQ.FT
FIRST FLOOR AREA	1984.22 SQ.FT
DOUBLE HEIGHT AREA	272 SQ.FT
OUT HOUSE AREA	272 SQ.FT
OUT HOUSE TERRACE AREA	281 SQ.FT
TOTAL FLOOR AREA	5595.70 SQ.FT

CLIENT:
MR.GURU PRASAD

PROJECT NAME:
RESIDENCE AT COIMBATORE

DRAWING TITLE:
GROUND FLOOR PLAN–WORKING DRAWING

DATE	DWG NO.	DRAWN BY
16.11.22	A2:01	DOREEN S.
SCALE	PROJ CODE	CHECKED BY
1"=10'0"	RES–475–2021	ARUN P.

N

ARUN AND ASSOCIATES
ARCHITECTS & PLANNERS
1289, TRICHY ROAD,
COIMBATORE – 641 018.

PRACTICAL TRAINING

JUNE 2022 - NOVEMBER 2022

MRS. KALAISELVI ARULKUMAR

RESIDENCE AT COIMBATORE

NAME : DOREEN GRACE SANTHOSH

REG NO : 39210021

ARUN & ASSOCIATES

1289,TRICHY ROAD,COIMBATORE-640018.

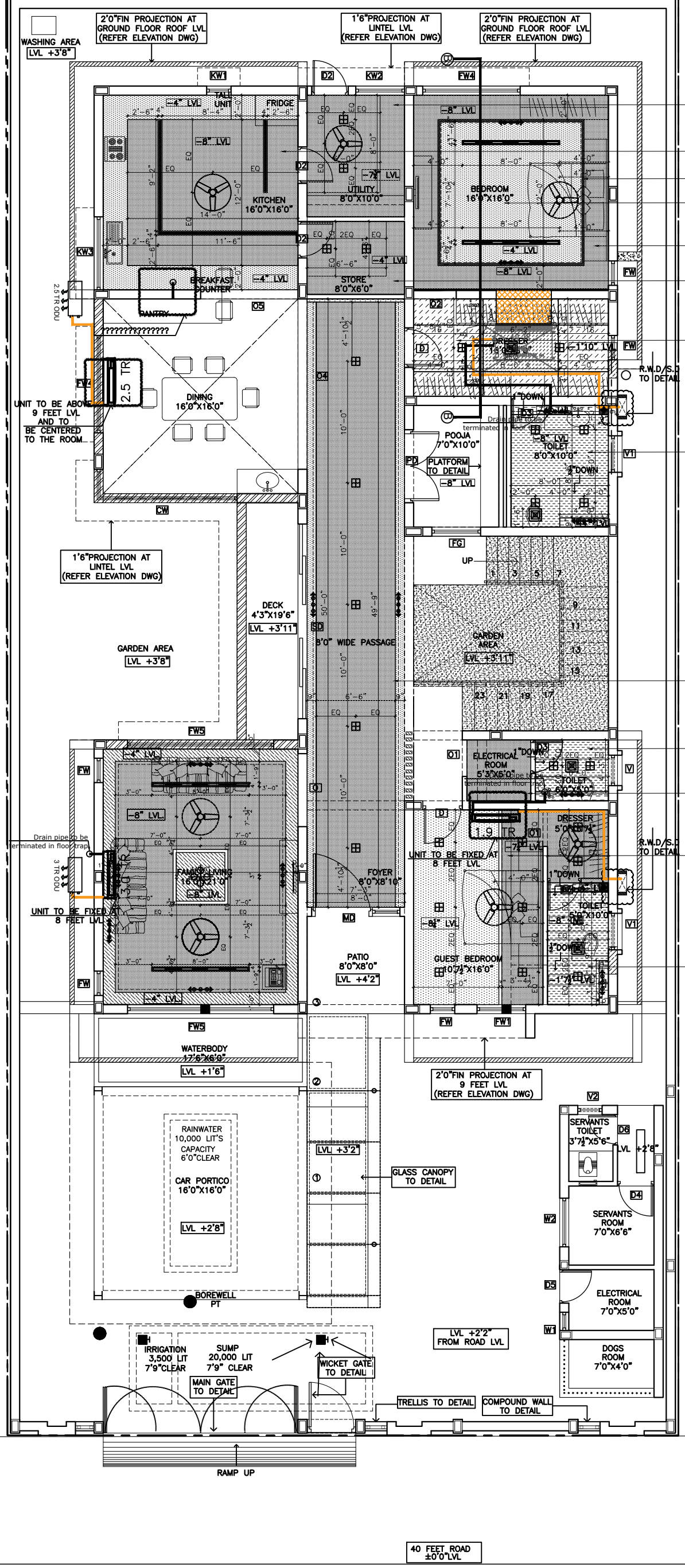

GYP BOARD FALSE CEILING FINISHED WITH WHITE DUCO PAINT

GYP BOARD FALSE CEILING FINISHED WITH WHITE DUCO PAINT

3.5MM THK VENEER ON 19MM THK COM. PLYWOOD

GYP BOARD FALSE CEILING FINISHED WITH WHITE DUCO PAINT

GYP BOARD FALSE CEILING FINISHED WITH WHITE DUCO PAINT

GYP BOARD FALSE CEILING FINISHED WITH WHITE DUCO PAINT

19MM THK COM. PLY

WATERPROOF GYP BOARD FALSE CEILING FINISHED WITH WHITE DUCO PAINT

GYP BOARD FALSE CEILING FINISHED WITH WHITE DUCO PAINT

WATERPROOF GYP BOARD FALSE CEILING FINISHED WITH WHITE DUCO PAINT

GYP BOARD FALSE CEILING FINISHED WITH WHITE DUCO PAINT

GYP BOARD FALSE CEILING FINISHED WITH WHITE DUCO PAINT

WATERPROOF GYP BOARD FALSE CEILING FINISHED WITH WHITE DUCO PAINT

This drawing is the property of ARUN AND ASSOCIATES (A&A) and shall not be passed on to any person not authorised by A&A to recieve it. It shall not be copied or modified in full or part without A&A's prior permission. The details furnished in this drawing are for this PROJECT only.

LEGEND

- GYP BOARD FALSE CEILING FINISHED WITH WHITE DUCO PAINT
- 3.5MM THK VENEER ON 19MM THK COM. PLYWOOD
- 19MM THK COM. PLY
- WATERPROOF GYP BOARD FALSE CEILING FINISHED WITH WHITE DUCO PAINT

FOR REFERENCE ONLY

AREA DETAILS

GROUND FLOOR AREA	2952.40 SQ.FT
PARKING AREA	298.00 SQ.FT
TOTAL GROUND FLOOR AREA	3250.40 SQ.FT
FIRST FLOOR AREA	2470.60 SQ.FT
DOUBLE HEIGHT AREA	352.50 SQ.FT
OUT HOUSE AREA	200.00 SQ.FT
TOTAL FLOOR AREA	5720.00 SQ.FT

NOTE:

* G.F.L TO F.F.L : 11'6"
* HEIGHT OF THE ANCILLARY BUILDING : 9'0"
* HEIGHT OF THE O.H.T : 8'0"
* NO.OF STAIRS: 23; RISER:6" ;THREAD:4'0"

REVISIONS:

NO.	DESCRIPTION	CHECKED	DATE
6.	KITCHEN	P.ARUN	16.06.21
5.	JOINERY(GUEST BEDROOM)	P.ARUN	04.06.21
4.	JOINERY	P.ARUN	26.03.21
3.	SUMP	P.ARUN	17.12.20
2.	REVISION 2	P.ARUN	21.11.20
1.	REVISION 1	P.ARUN	20.10.20

CLIENT:
MRS. KALAISELVI ARULKUMAR

PROJECT NAME:
RESIDENCE AT COIMBATORE

DRAWING TITLE:
GROUND FLOOR – FALSE CEILING LAYOUT

DATE	DWG NO.	DRAWN BY
15.09.22	A2:01	DOREEN S.
SCALE	PROJ CODE	CHECKED BY
1"=6'0"	RES–400–2020	ARUN P.

N

ARUN AND ASSOCIATES
ARCHITECTS & PLANNERS
1289, TRICHY ROAD,
COIMBATORE – 641 018.

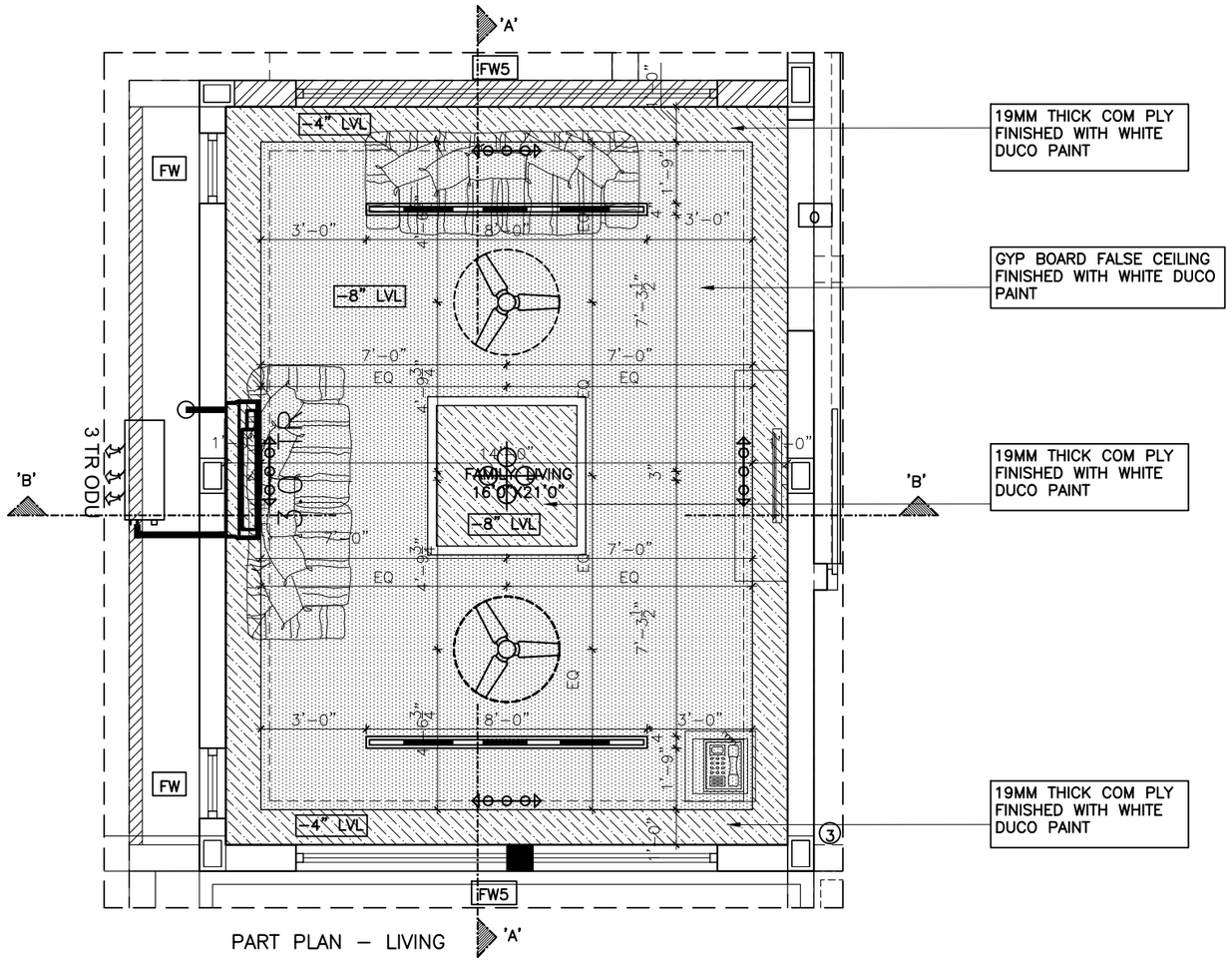

PART PLAN – LIVING

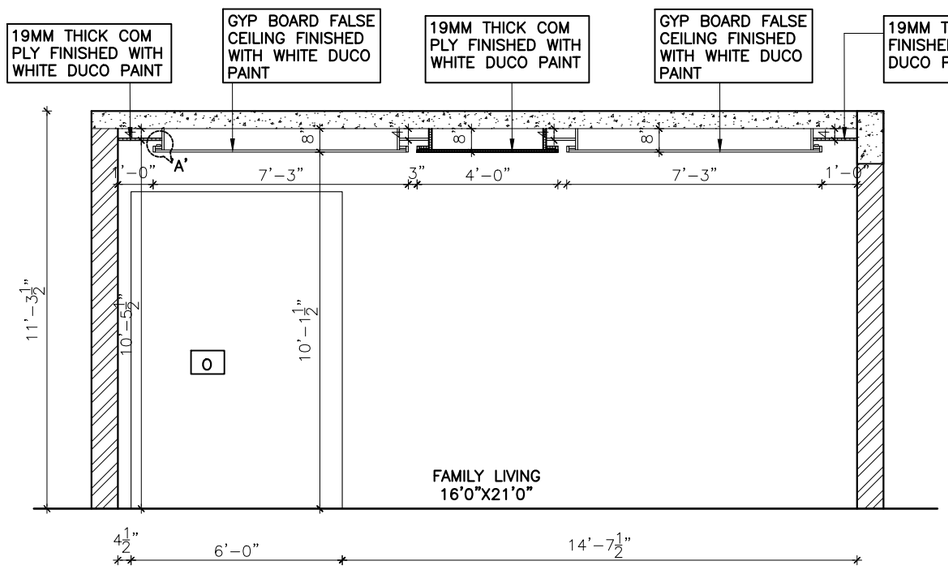

SECTION AA

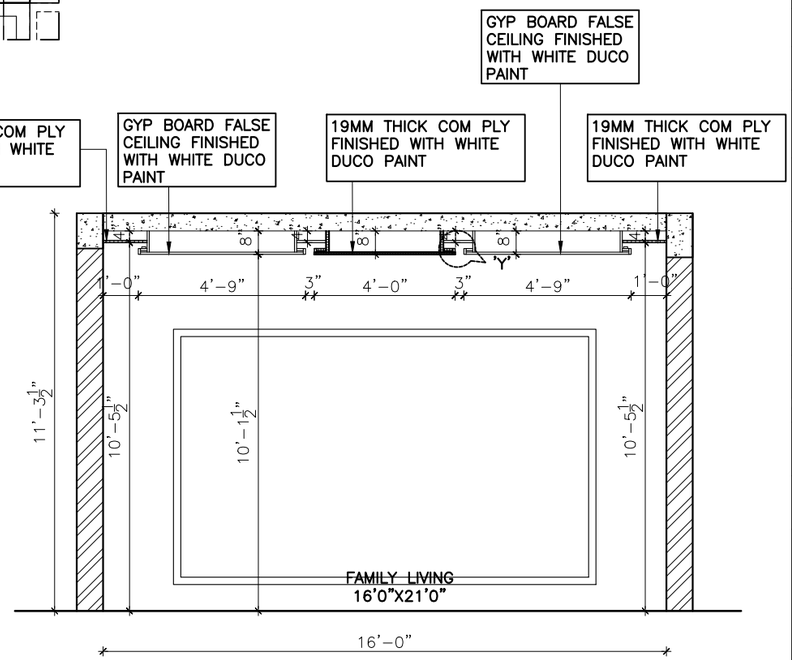

SECTION BB

This drawing is the property of ARUN AND ASSOCIATES (A&A) and shall not be passed on to any person not authorised by A&A to recieve it. It shall not be copied or modified in full or part without A&A's prior permission. The details furnished in this drawing are for this PROJECT only.

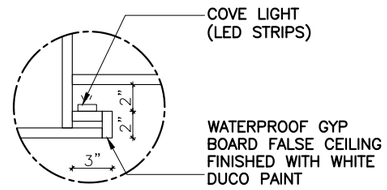

DETAIL–A(1:4)

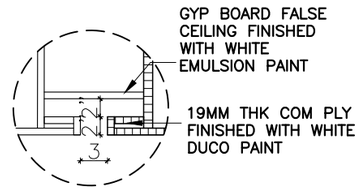

DETAIL–Y

ELECTRICAL FITTINGS DETAIL

S.NO	SYMBOL	ELECTRICAL FITTINGS
01		Ceiling flush type light fitting
02		Cove Light
03		Ceiling Fan
04		Decorative multi bulb light

CLIENT:
MRS. KALAISELVI ARULKUMAR

PROJECT NAME:
RESIDENCE AT COIMBATORE

DRAWING TITLE:
G.F LIVING ROOM – FALSE CEILING DETAIL

DATE	DWG NO.	DRAWN BY
01.10.22	A2:01	DOREEN S.
SCALE	PROJ CODE	CHECKED BY
1"=6'0"	RES–338–2018	ARUN P.

N

ARUN AND ASSOCIATES
ARCHITECTS & PLANNERS
1289, TRICHY ROAD,
COIMBATORE – 641 018.

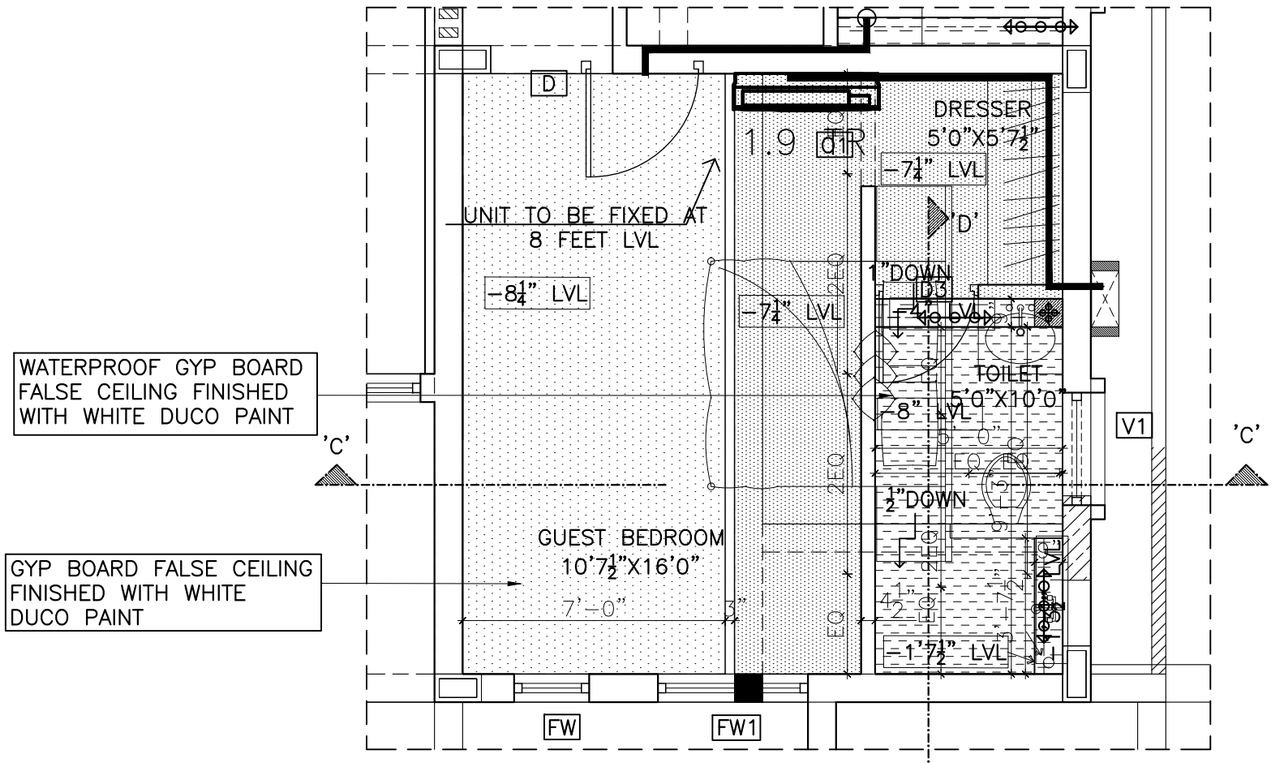

PART PLAN – G.F. BEDROOM, TOILET

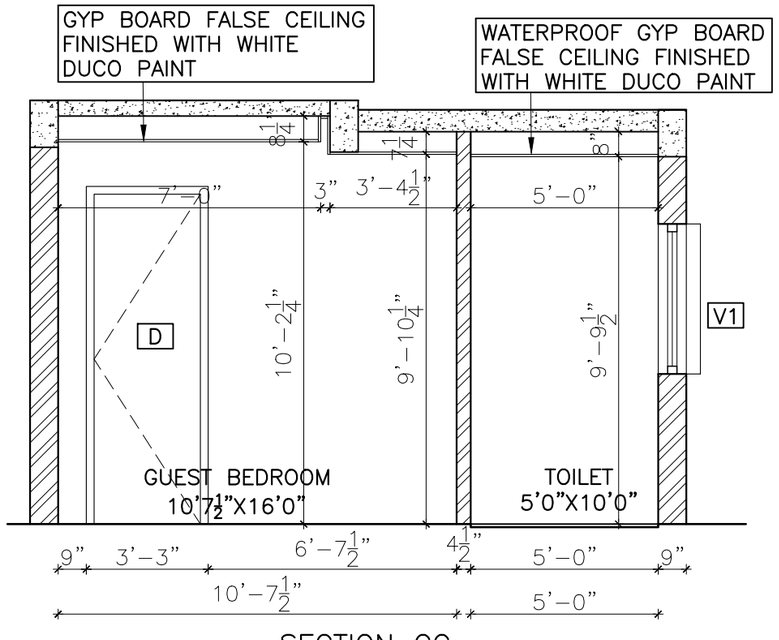

SECTION CC

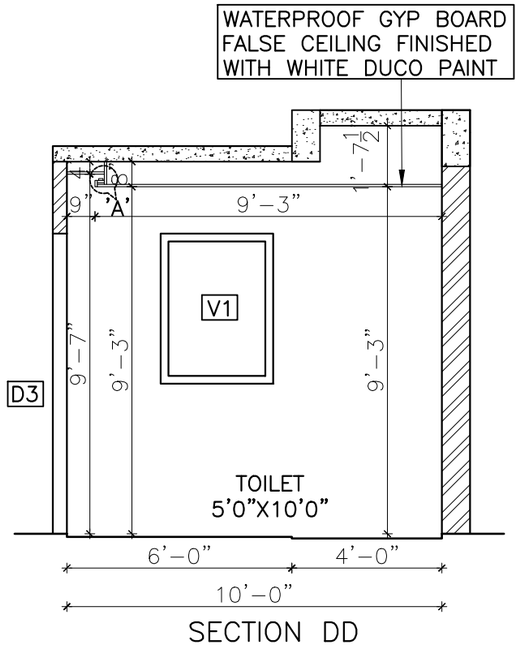

SECTION DD

This drawing is the property of ARUN AND ASSOCIATES (A&A) and shall not be passed on to any person not authorised by A&A to recieve it. It shall not be copied or modified in full or part without A&A's prior permission. The details furnished in this drawing are for this PROJECT only.

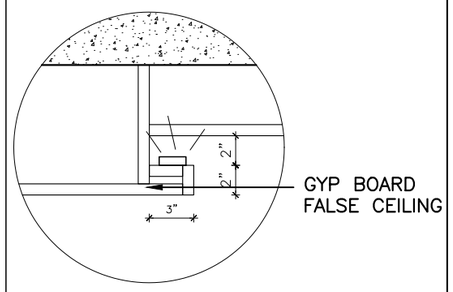

DETAIL–A

NOTE:

CHANDELIER LOCATION ON FALSE CEILING AS PER LIGHTING CONSULTANT – 19MM THK COM.PLY WITH WHITE DUCO PAINT TO BE PROVIDED

ELECTRICAL FITTINGS DETAIL

S.NO	SYMBOL	ELECTRICAL FITTINGS
01		Ceiling flush type light fitting
02		Cove Light
03		Ceiling Fan
04		Decorative multi bulb light

CLIENT:
MRS. KALAISELVI ARULKUMAR

PROJECT NAME:
RESIDENCE AT COIMBATORE

DRAWING TITLE:
G.F. BEDROOM – FALSE CEILING DETAIL

DATE	DWG NO.	DRAWN BY
16.09.22	A2:01	DOREEN S
SCALE	PROJ CODE	CHECKED BY
1"=6'0"	RES–338–2018	ARUN P.

N

ARUN AND ASSOCIATES
ARCHITECTS & PLANNERS
1289, TRICHY ROAD,
COIMBATORE – 641 018.

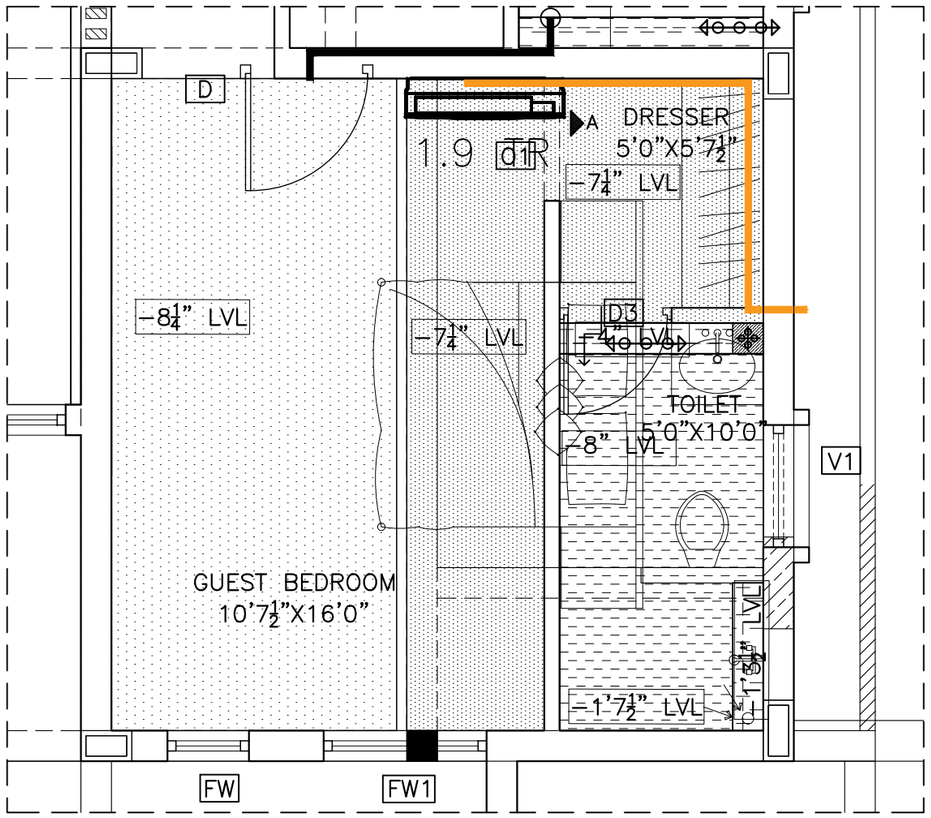

PART PLAN – G.F. BEDROOM, TOILET

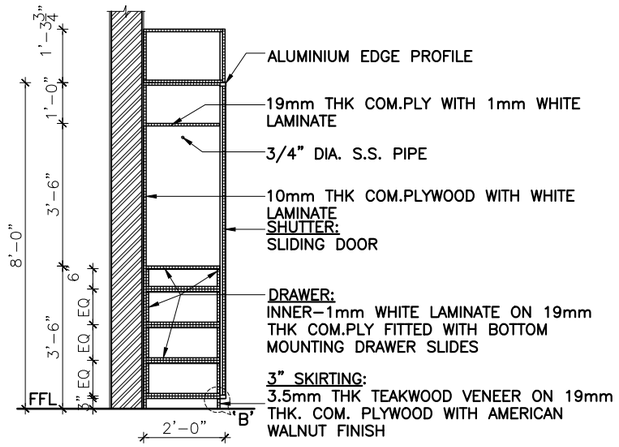

SECTION X

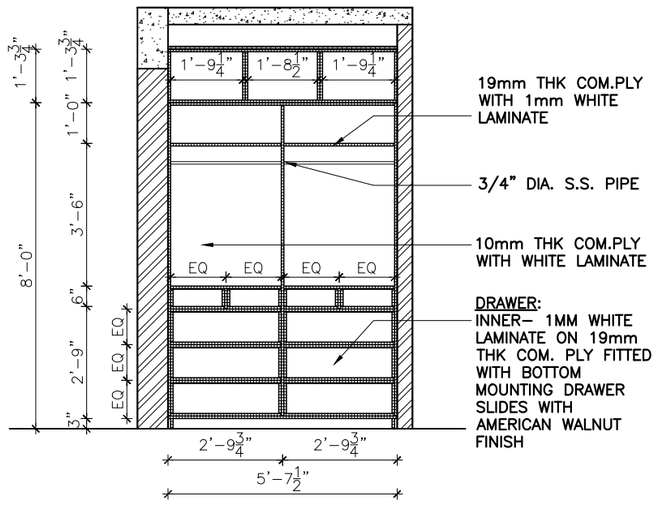

SECTION Y

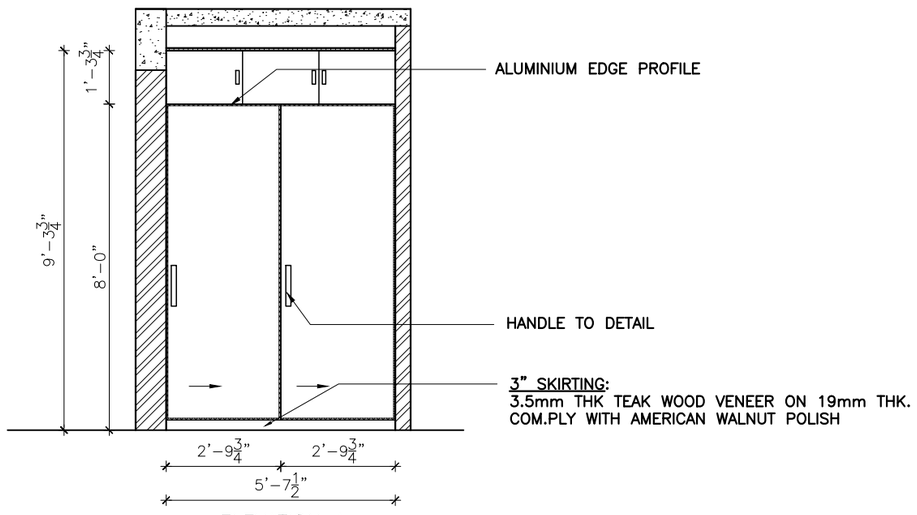

ELEVATION A

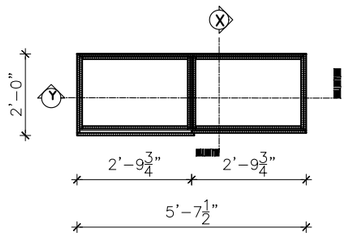

WARDROBE PART PLAN

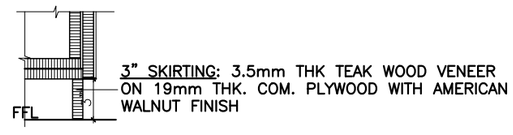

DETAIL–B

This drawing is the property of ARUN AND ASSOCIATES (A&A) and shall not be passed on to any person not authorised by A&A to recieve it. It shall not be copied or modified in full or part without A&A's prior permission. The details furnished in this drawing are for this PROJECT only.

CLIENT:
MRS. KALAISELVI ARULKUMAR

PROJECT NAME:
RESIDENCE AT COIMBATORE

DRAWING TITLE:
G.F. BEDROOM 2 DRESSER – WARDROBE DETAIL

DATE	DWG NO.	DRAWN BY	
08.11.22	A2:01	DOREEN S	
SCALE	PROJ CODE	CHECKED BY	
1"=6'0"	RES–338–2018	ARUN P.	N

ARUN AND ASSOCIATES
ARCHITECTS & PLANNERS
1289, TRICHY ROAD,
COIMBATORE – 641 018.

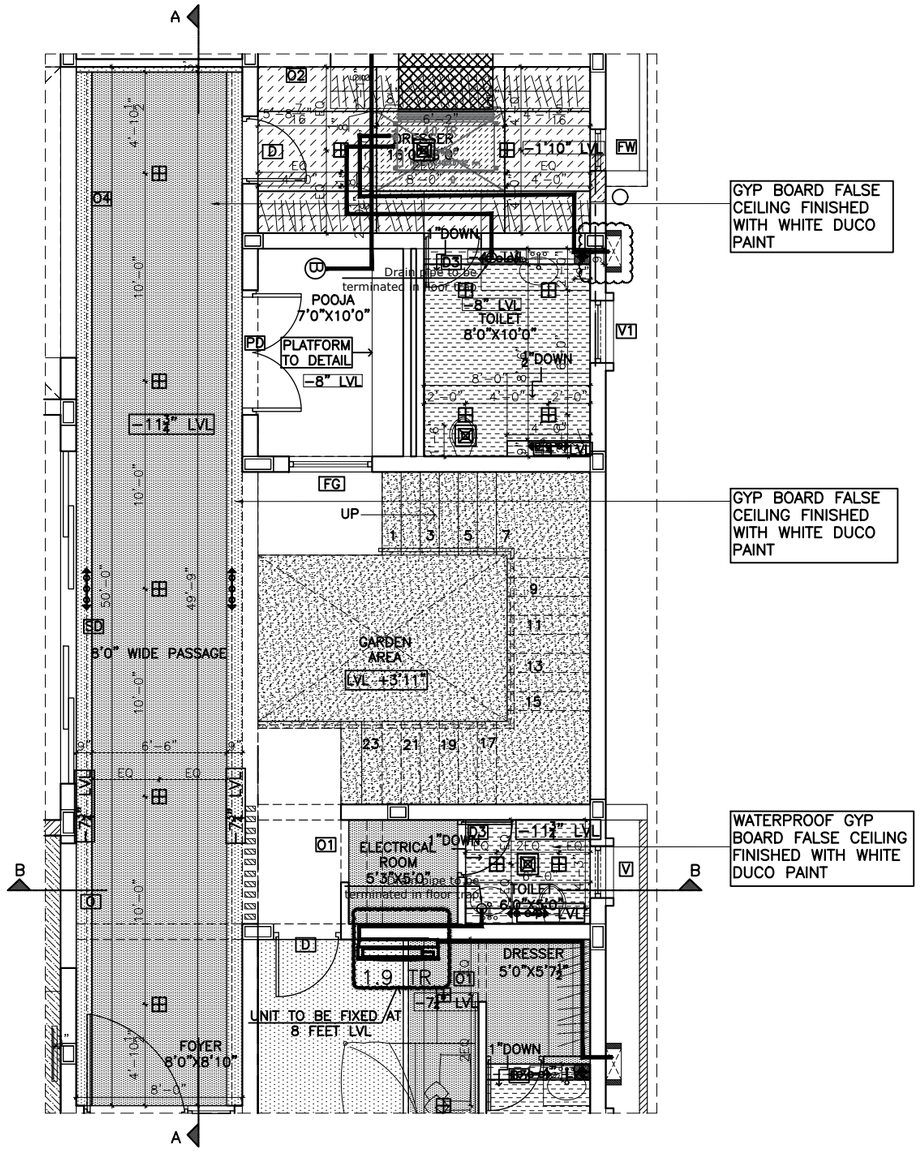

GYP BOARD FALSE CEILING FINISHED WITH WHITE DUCO PAINT

GYP BOARD FALSE CEILING FINISHED WITH WHITE DUCO PAINT

WATERPROOF GYP BOARD FALSE CEILING FINISHED WITH WHITE DUCO PAINT

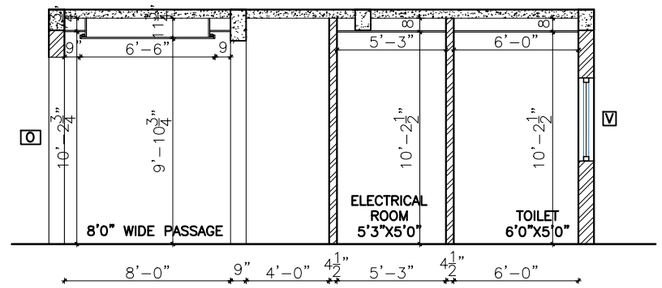

GYP BOARD FALSE CEILING FINISHED WITH WHITE DUCO PAINT

WATERPROOF GYP BOARD FALSE CEILING FINISHED WITH WHITE DUCO PAINT

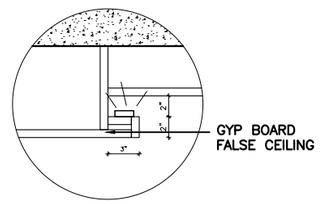

DETAIL-A

GYP BOARD FALSE CEILING FINISHED WITH WHITE DUCO PAINT

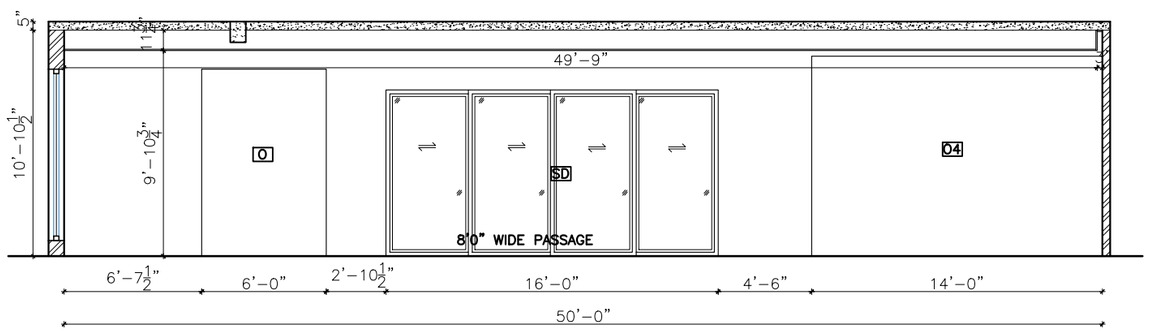

This drawing is the property of ARUN AND ASSOCIATES (A&A) and shall not be passed on to any person not authorised by A&A to recieve it. It shall not be copied or modified in full or part without A&A's prior permission. The details furnished in this drawing are for this PROJECT only.

ELECTRICAL FITTINGS DETAIL

S.NO	SYMBOL	ELECTRICAL FITTINGS
01		Ceiling flush type light fitting
02		Cove Light
03		Ceiling Fan
04		Decorative multi bulb light
05		Exhaust fan

CLIENT:
MRS. KALAISELVI ARULKUMAR

PROJECT NAME:
RESIDENCE AT COIMBATORE

DRAWING TITLE:
F.F PASSAGE – FALSE CEILING DETAIL

DATE	DWG NO.	DRAWN BY	
10.09.22	A2:01	DOREEN S.	
SCALE	PROJ CODE	CHECKED BY	
1"=6'0"	RES-338-2018	ARUN P.	N

ARUN AND ASSOCIATES
ARCHITECTS & PLANNERS
1289, TRICHY ROAD,
COIMBATORE – 641 018.

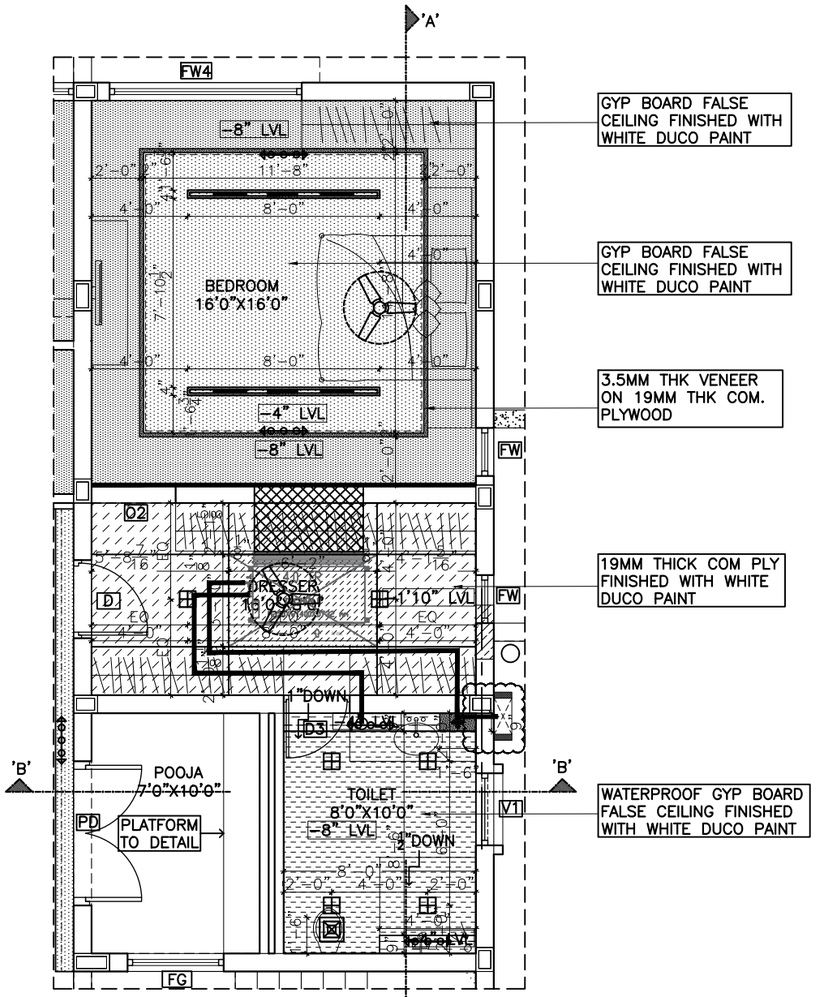

PART PLAN – BEDROOM, DRESSER, TOILET

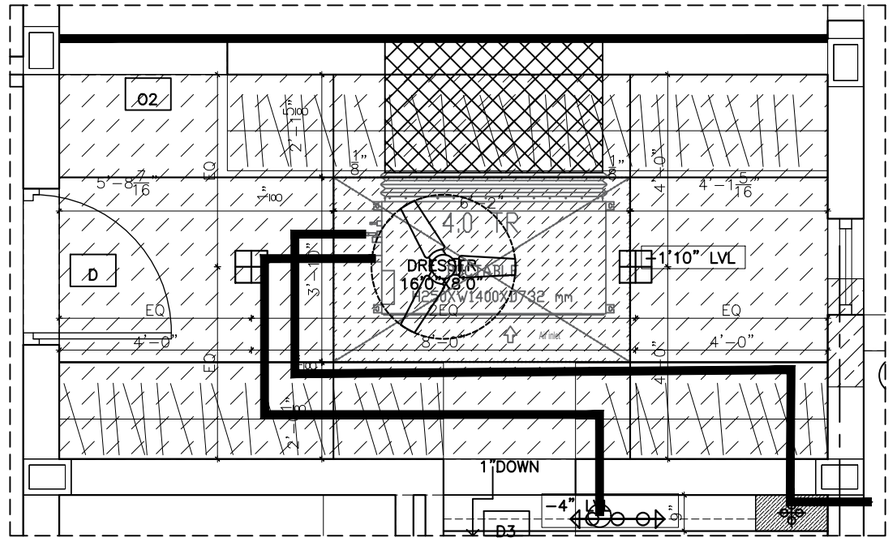

PART PLAN – DRESSER (1:2)

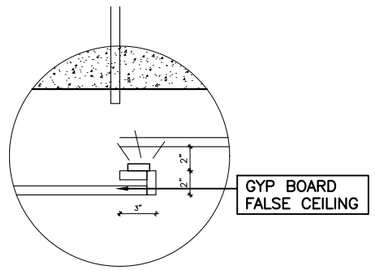

DETAIL–A

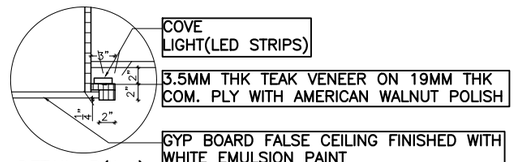

DETAIL–B(1:4)

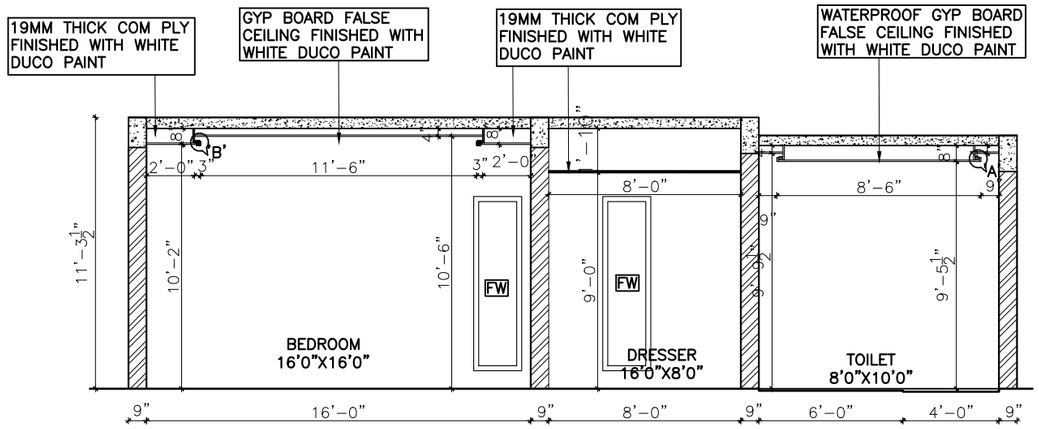

SECTION AA

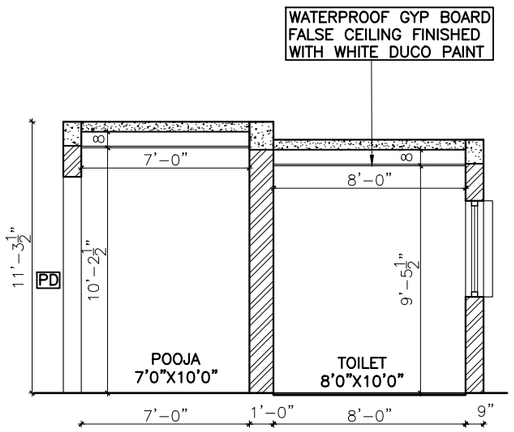

SECTION BB

This drawing is the property of ARUN AND ASSOCIATES (A&A) and shall not be passed on to any person not authorised by A&A to recieve it. It shall not be copied or modified in full or part without A&A's prior permission. The details furnished in this drawing are for this PROJECT only.

NOTE:
CHANDELIER LOCATION ON FALSE CEILING AS PER LIGHTING CONSULTANT – 19MM THK COM.PLY WITH WHITE DUCO PAINT TO BE PROVIDED

ELECTRICAL FITTINGS DETAIL

S.NO	SYMBOL	ELECTRICAL FITTINGS
01		Ceiling flush type light fitting
02		Cove Light
03		Ceiling Fan
04		Decorative multi bulb light

CLIENT:
MRS. KALAISELVI ARULKUMAR

PROJECT NAME:
RESIDENCE AT COIMBATORE

DRAWING TITLE:
G.F. BEDROOM – FALSE CEILING DETAIL

DATE	DWG NO.	DRAWN BY
29.09.22	A2:01	DOREEN S
SCALE	PROJ CODE	CHECKED BY
1"=6'0"	RES–338–2018	ARUN P.

N

ARUN AND ASSOCIATES
ARCHITECTS & PLANNERS
1289, TRICHY ROAD,
COIMBATORE – 641 018.

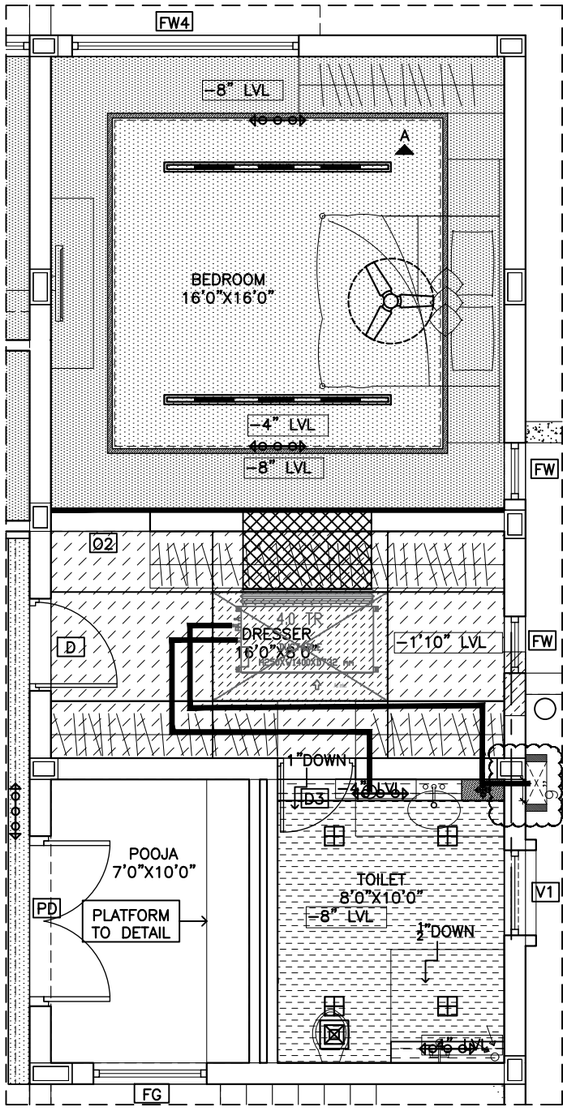

PART PLAN – BEDROOM, DRESSER, TOILET

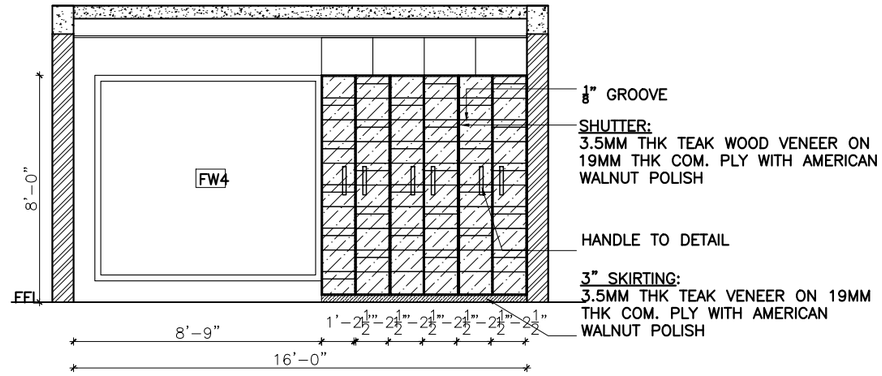

ELEVATION A

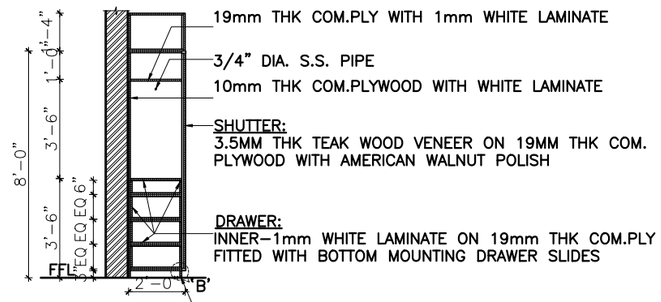

SECTION X

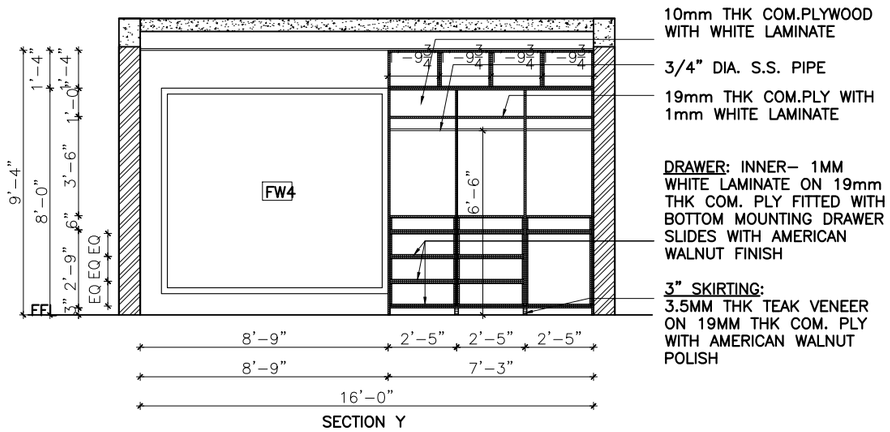

SECTION Y

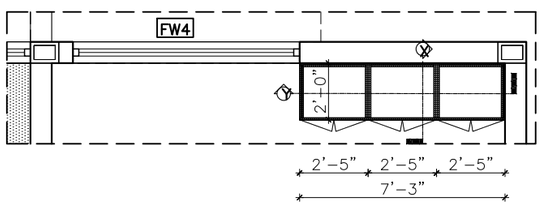

GF BEDROOM 1 – WARDROBE – PART PLAN

3" SKIRTING: 3.5mm THK TEAK WOOD VENEER ON 19mm THK. COM. PLYWOOD WITH AMERICAN WALNUT FINISH

DETAIL–B

This drawing is the property of ARUN AND ASSOCIATES (A&A) and shall not be passed on to any person not authorised by A&A to recieve it. It shall not be copied or modified in full or part without A&A's prior permission. The details furnished in this drawing are for this PROJECT only.

CLIENT:
MRS. KALAISELVI ARULKUMAR

PROJECT NAME:
RESIDENCE AT COIMBATORE

DRAWING TITLE:
G.F. BEDROOM 1 – WARDROBE DETAIL

DATE	DWG NO.	DRAWN BY	
29.09.22	A2:01	DOREEN S	N
SCALE	PROJ CODE	CHECKED BY	
1"=6'0"	RES-338-2018	ARUN P.	

ARUN AND ASSOCIATES
ARCHITECTS & PLANNERS
1289, TRICHY ROAD,
COIMBATORE – 641 018.

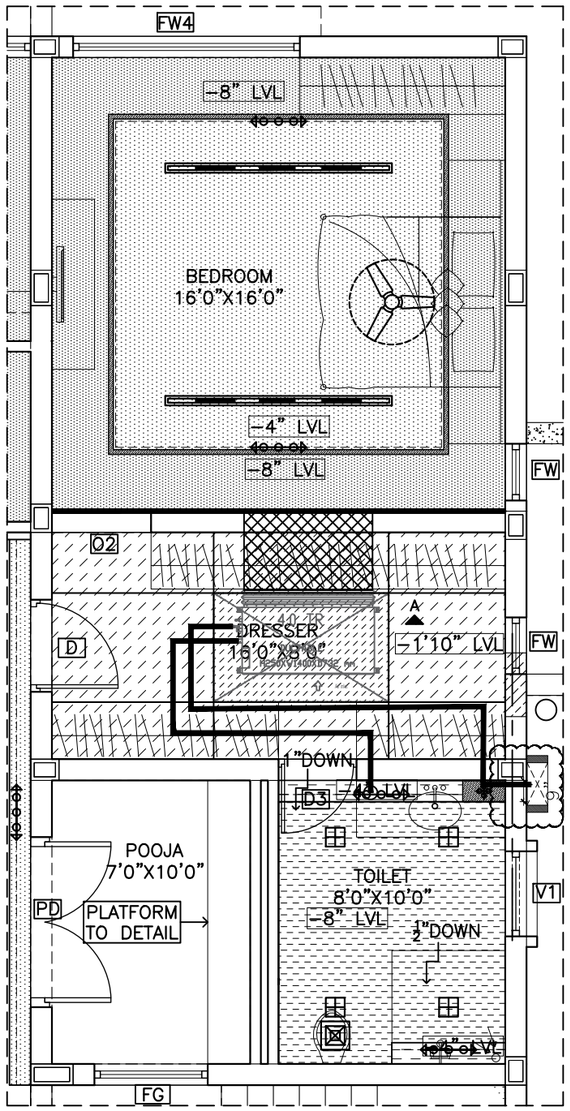

PART PLAN – BEDROOM, DRESSER, TOILET

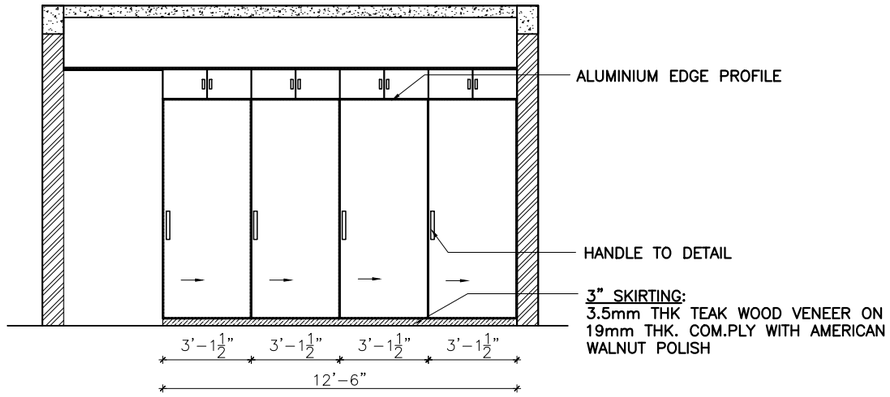

ELEVATION A

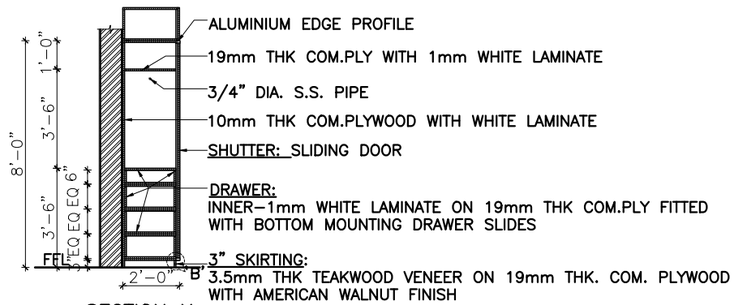

SECTION X

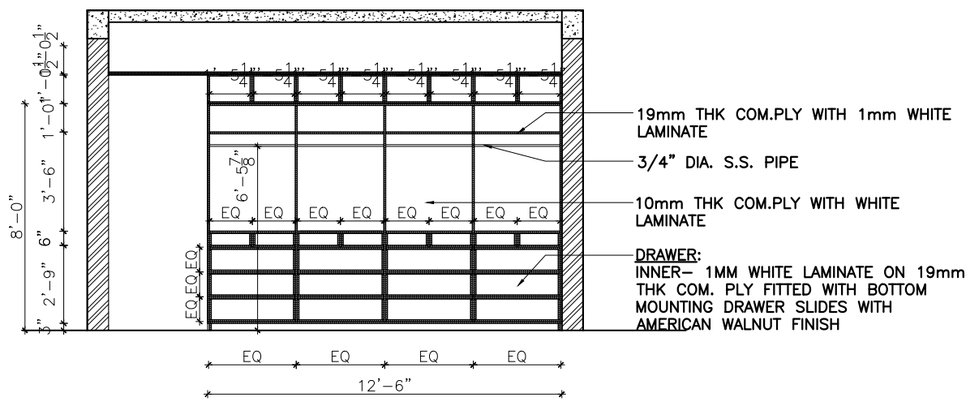

SECTION Y

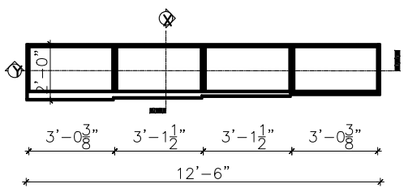

WARDROBE PART PLAN

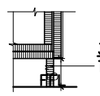

3" SKIRTING: 3.5mm THK TEAK WOOD VENEER ON 19mm THK. COM. PLYWOOD WITH AMERICAN WALNUT FINISH

DETAIL–B

This drawing is the property of ARUN AND ASSOCIATES (A&A) and shall not be passed on to any person not authorised by A&A to recieve it. It shall not be copied or modified in full or part without A&A's prior permission. The details furnished in this drawing are for this PROJECT only.

CLIENT:
MRS. KALAISELVI ARULKUMAR

PROJECT NAME:
RESIDENCE AT COIMBATORE

DRAWING TITLE:
G.F. BEDROOM 1 DRESSER – WARDROBE DETAIL

DATE	DWG NO.	DRAWN BY
29.09.22	A2:01	DOREEN S
SCALE	PROJ CODE	CHECKED BY
1"=6'0"	RES–338–2018	ARUN P.

N

ARUN AND ASSOCIATES
ARCHITECTS & PLANNERS
1289, TRICHY ROAD,
COIMBATORE – 641 018.

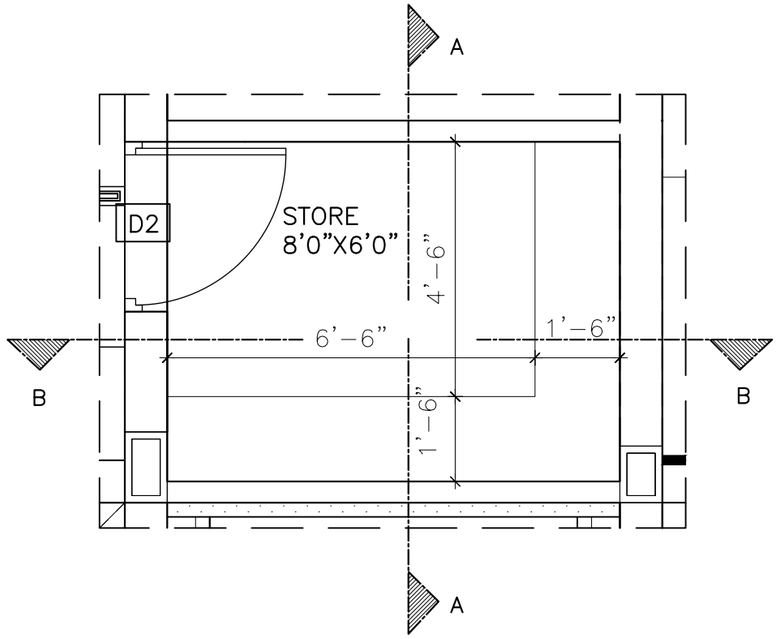

PART PLAN – STORE

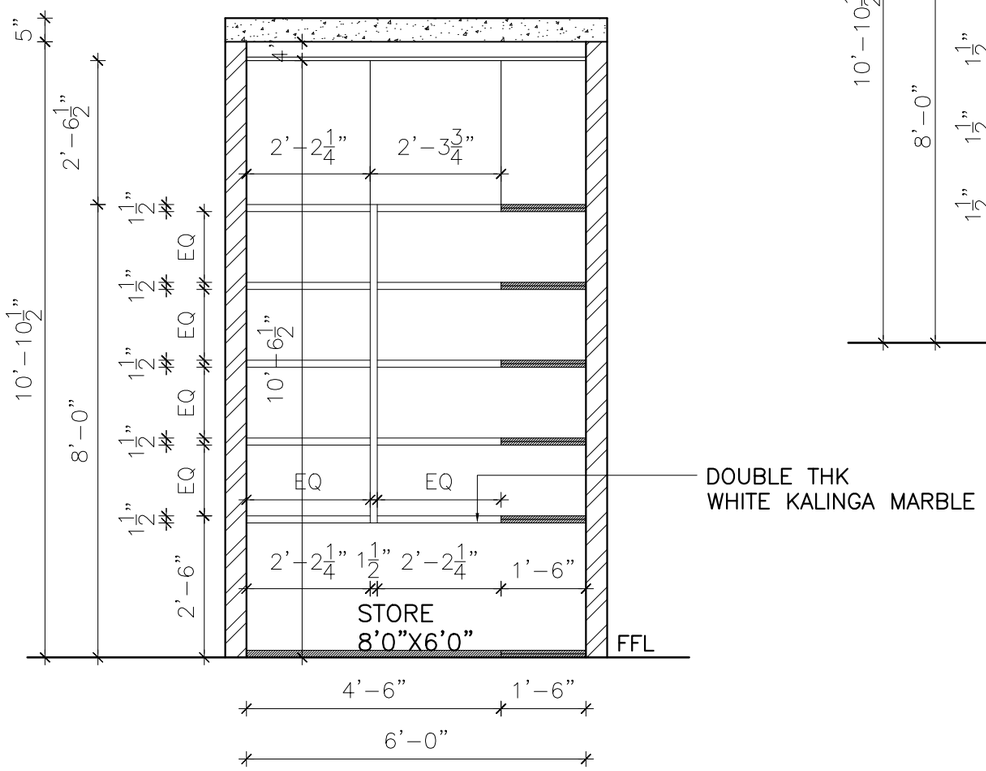

SECTION AA

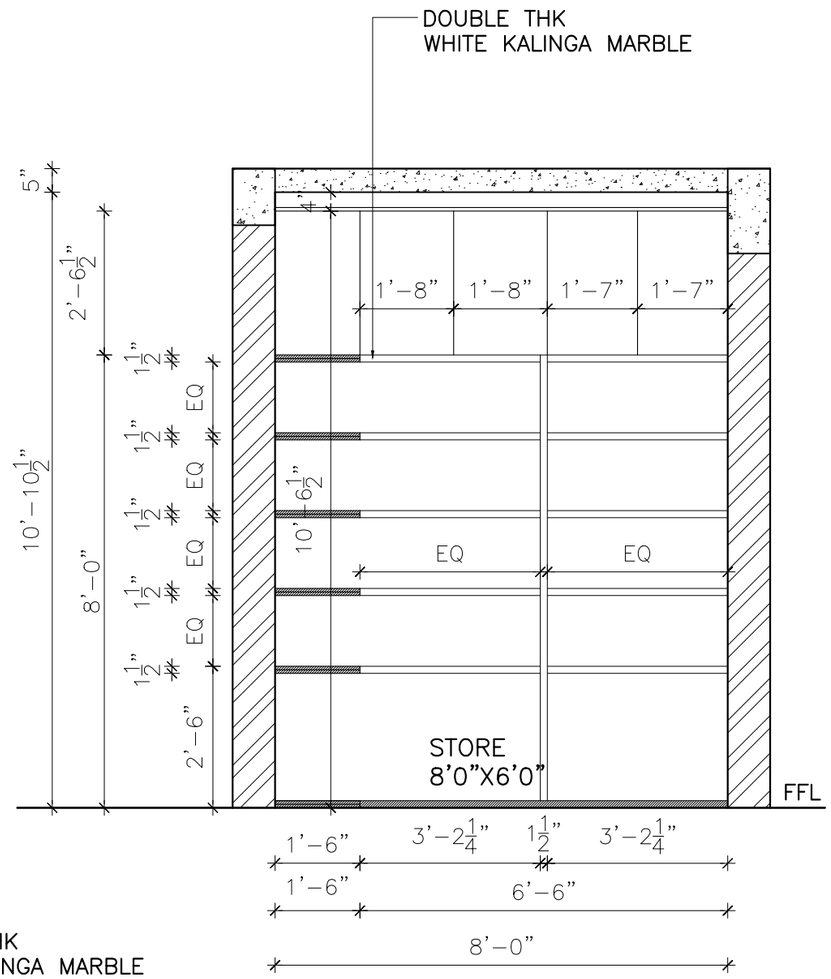

SECTION BB

This drawing is the property of ARUN AND ASSOCIATES (A&A) and shall not be passed on to any person not authorised by A&A to recieve it. It shall not be copied or modified in full or part without A&A's prior permission. The details furnished in this drawing are for this PROJECT only.

REVISIONS:

NO.	DESCRIPTION	CHECKED	DATE

CLIENT:
MRS. KALAISELVI ARULKUMAR

PROJECT NAME:
RESIDENCE AT COIMBATORE

DRAWING TITLE:
STORAGE DETAIL – G.F. STORE ROOM

DATE	DWG NO.	DRAWN BY
19.09.22	A4:01	DOREEN S.
SCALE	PROJ CODE	CHECKED BY
1"=4'0"	RES-332-2017	ARUN P.

N

ARUN AND ASSOCIATES
ARCHITECTS & PLANNERS
1289, TRICHY ROAD,
COIMBATORE – 641 018.

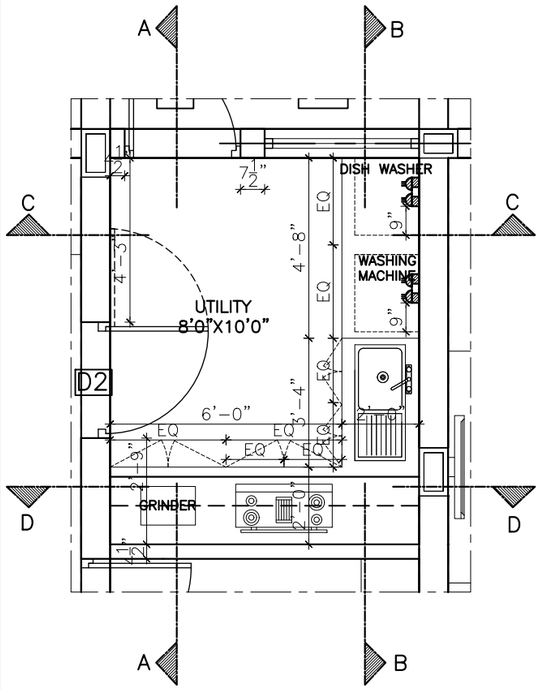

PART PLAN UTILITY

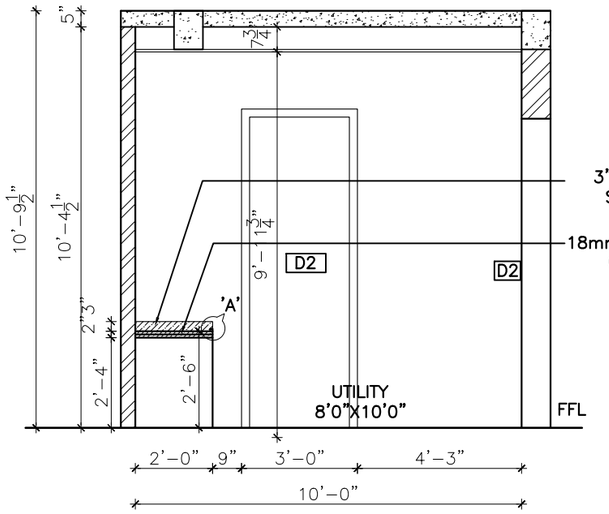

SECTION AA

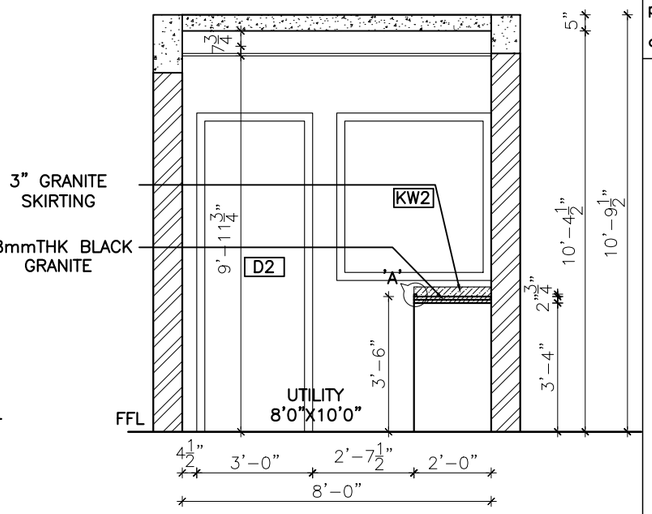

SECTION CC

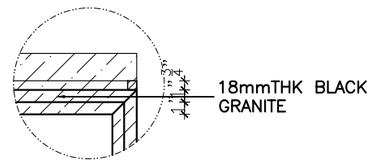

DETAIL–A

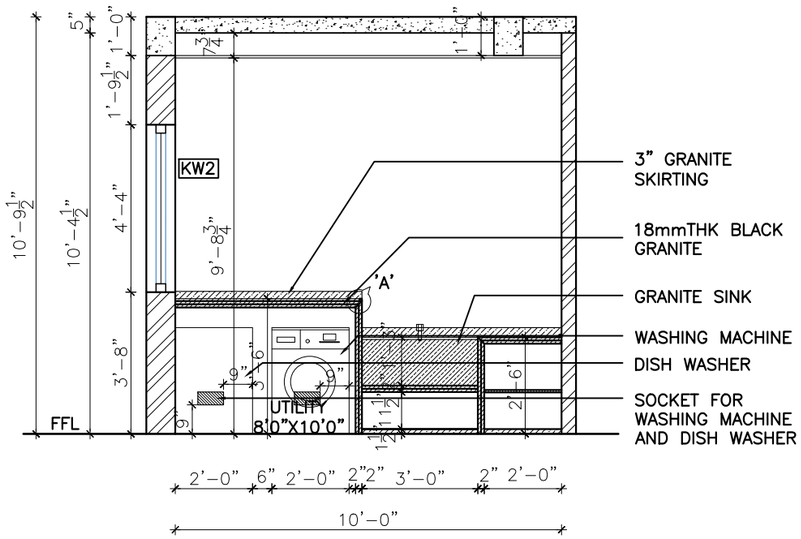

SECTION BB

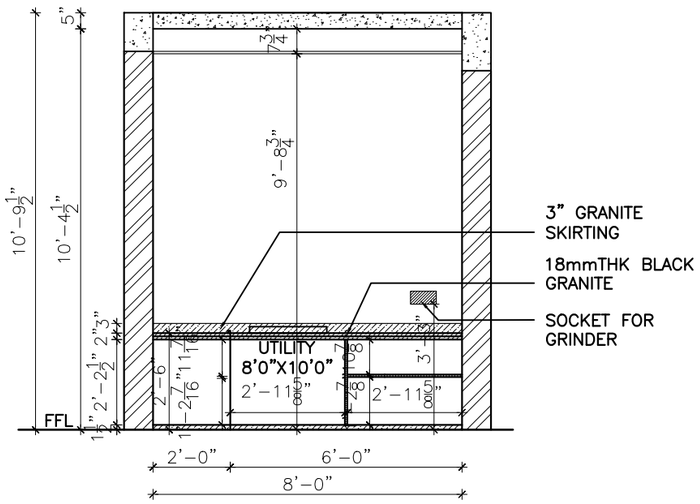

SECTION DD

This drawing is the property of ARUN AND ASSOCIATES (A&A) and shall not be passed on to any person not authorised by A&A to receive it.It shall not be copied or modified in full or part without A&A's prior permission. The details furnished in this drawing are for this PROJECT only.

CLIENT:
MRS. KALAISELVI ARULKUMAR

PROJECT NAME:
RESIDENCE AT COIMBATORE

DRAWING TITLE:
UTILITY DETAIL DRAWING

DATE	DWG NO.	DRAWN BY	N
20.09.22	A2:01	DOREEN S.	
SCALE	PROJ CODE	CHECKED BY	
1"=4'0"	RES–400–2020	ARUN P.	

ARUN AND ASSOCIATES
ARCHITECTS & PLANNERS
1289, TRICHY ROAD,
COIMBATORE – 641 018.

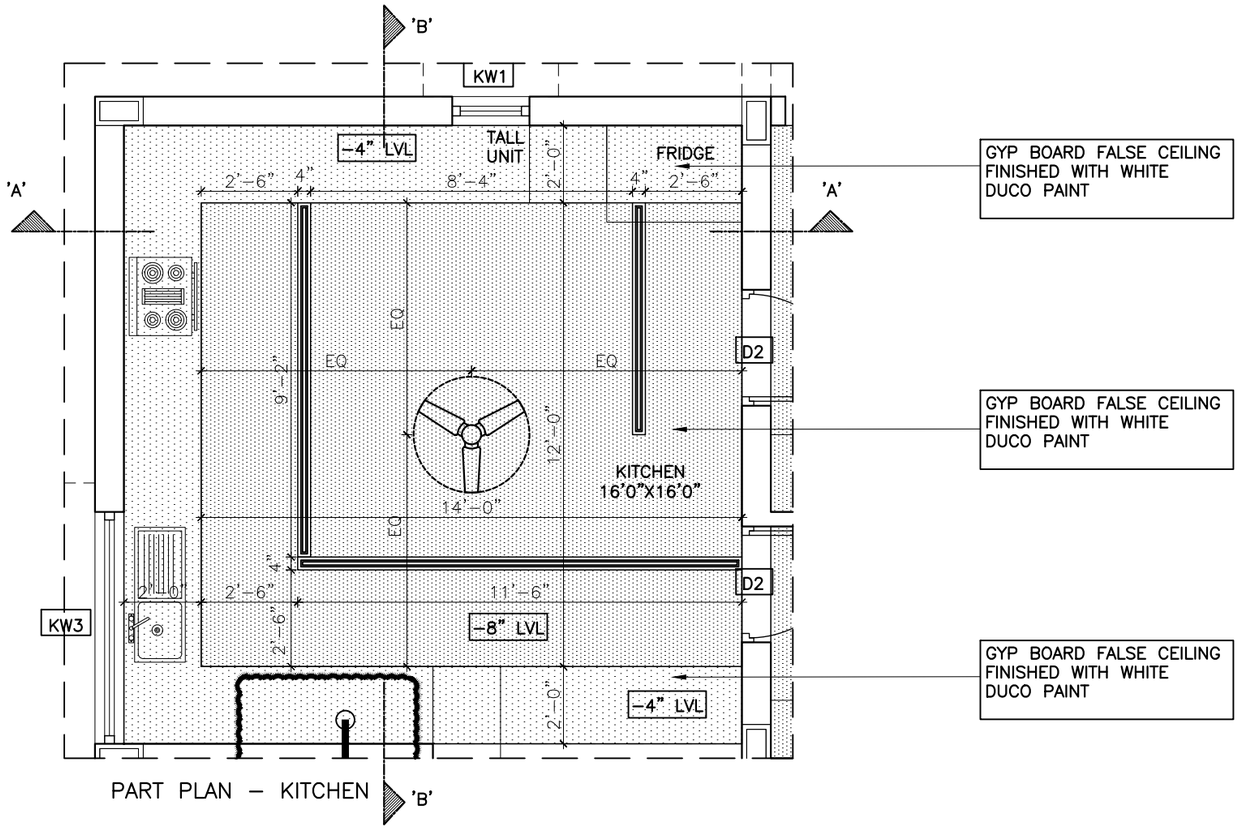

PART PLAN – KITCHEN

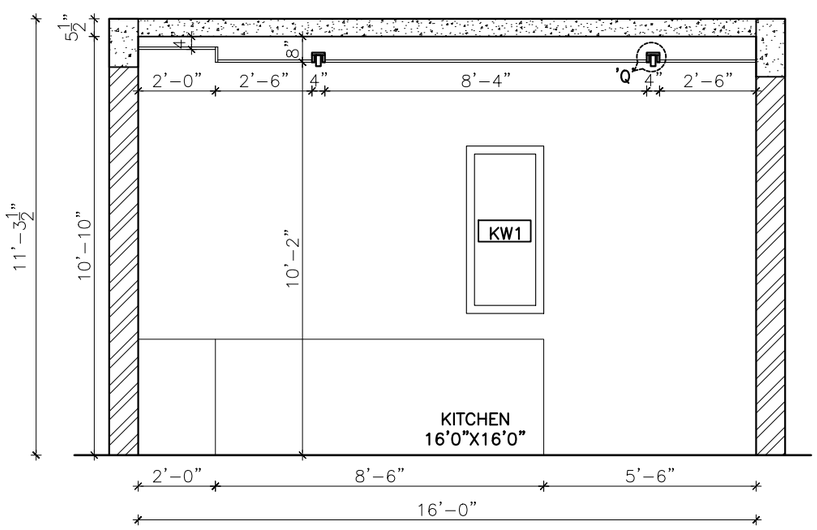

SECTION AA

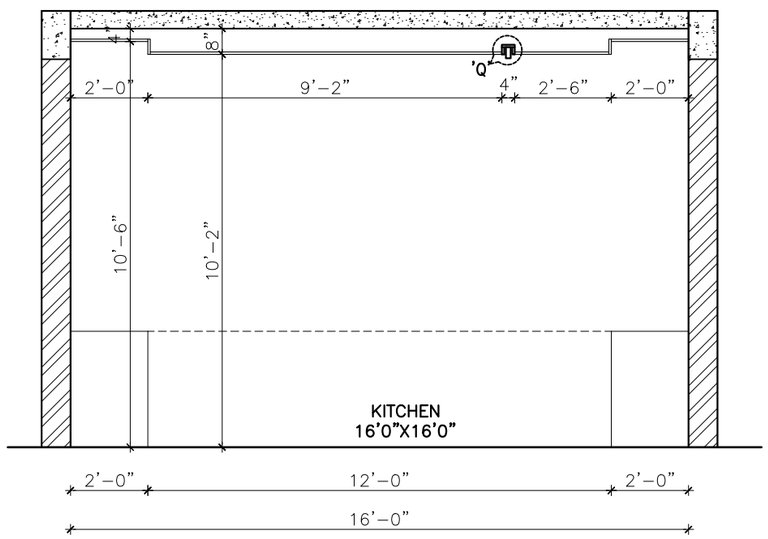

SECTION BB

This drawing is the property of ARUN AND ASSOCIATES (A&A) and shall not be passed on to any person not authorised by A&A to receive it.It shall not be copied or modified in full or part without A&A's prior permission. The details furnished in this drawing are for this PROJECT only.

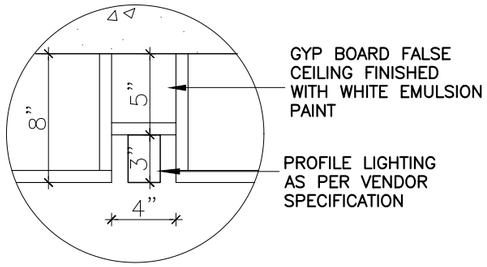

DETAIL–Q(1:4)

CLIENT:
MRS. KALAISELVI ARULKUMAR

PROJECT NAME:
RESIDENCE AT COIMBATORE

DRAWING TITLE:
G.F. KITCHEN – FALSE CEILING DETAIL

DATE	DWG NO.	DRAWN BY
20.09.22	A2:01	DOREEN S.
SCALE	PROJ CODE	CHECKED BY
1"=4'0"	RES–400–2020	ARUN P.

N

ARUN AND ASSOCIATES
ARCHITECTS & PLANNERS
1289, TRICHY ROAD,
COIMBATORE – 641 018.

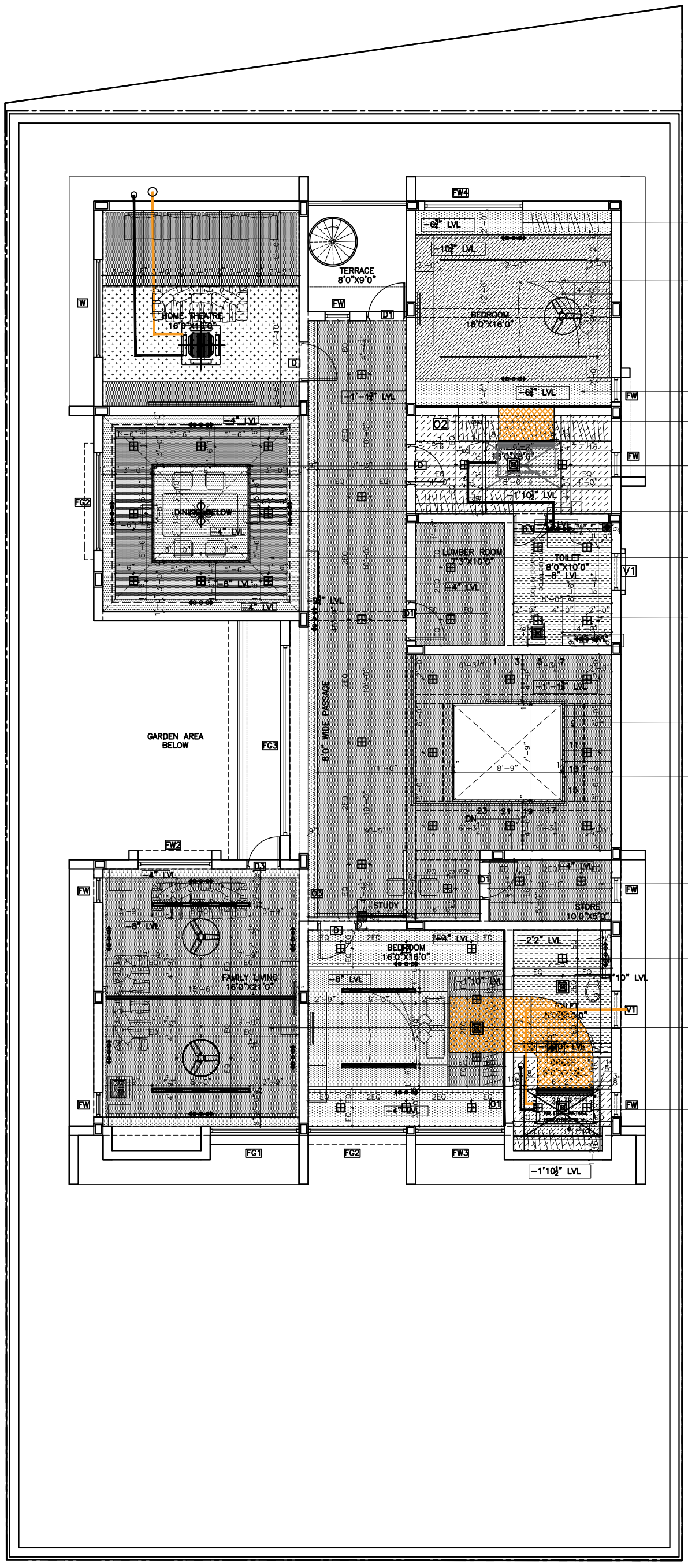

This drawing is the property of ARUN AND ASSOCIATES (A&A) and shall not be passed on to any person not authorised by A&A to recieve it. It shall not be copied or modified in full or part without A&A's prior permission. The details furnished in this drawing are for this PROJECT only.

LEGEND

- GYP BOARD FALSE CEILING FINISHED WITH WHITE DUCO PAINT
- 3.5MM THK VENEER ON 19MM THK COM. PLYWOOD
- 19MM THK COM. PLY
- WATERPROOF GYP BOARD FALSE CEILING FINISHED WITH WHITE DUCO PAINT

FOR REFERENCE ONLY

AREA DETAILS

GROUND FLOOR AREA	2952.40 SQ.FT
PARKING AREA	298.00 SQ.FT
TOTAL GROUND FLOOR AREA	3250.40 SQ.FT
FIRST FLOOR AREA	2470.60 SQ.FT
DOUBLE HEIGHT AREA	352.50 SQ.FT
OUT HOUSE AREA	200.00 SQ.FT
TOTAL FLOOR AREA	5720.00 SQ.FT

NOTE:

* G.F.L TO F.F.L : 11'6"
* HEIGHT OF THE ANCILLARY BUILDING : 9'0"
* HEIGHT OF THE O.H.T : 8'0"
* NO.OF STAIRS: 23; RISER:6" ;THREAD:4'0"

REVISIONS:

NO.	DESCRIPTION	CHECKED	DATE
6.			
5.			
4.			
3.			
2.			
1.			

CLIENT:
MRS. KALAISELVI ARULKUMAR

PROJECT NAME:
RESIDENCE AT COIMBATORE

DRAWING TITLE:
FIRST FLOOR – FALSE CEILING LAYOUT

DATE	DWG NO.	DRAWN BY
14.09.22	A2:01	DOREEN S.
SCALE	PROJ CODE	CHECKED BY
1"=6'0"	RES–400–2020	ARUN P.

N

ARUN AND ASSOCIATES
ARCHITECTS & PLANNERS
1289, TRICHY ROAD,
COIMBATORE – 641 018.

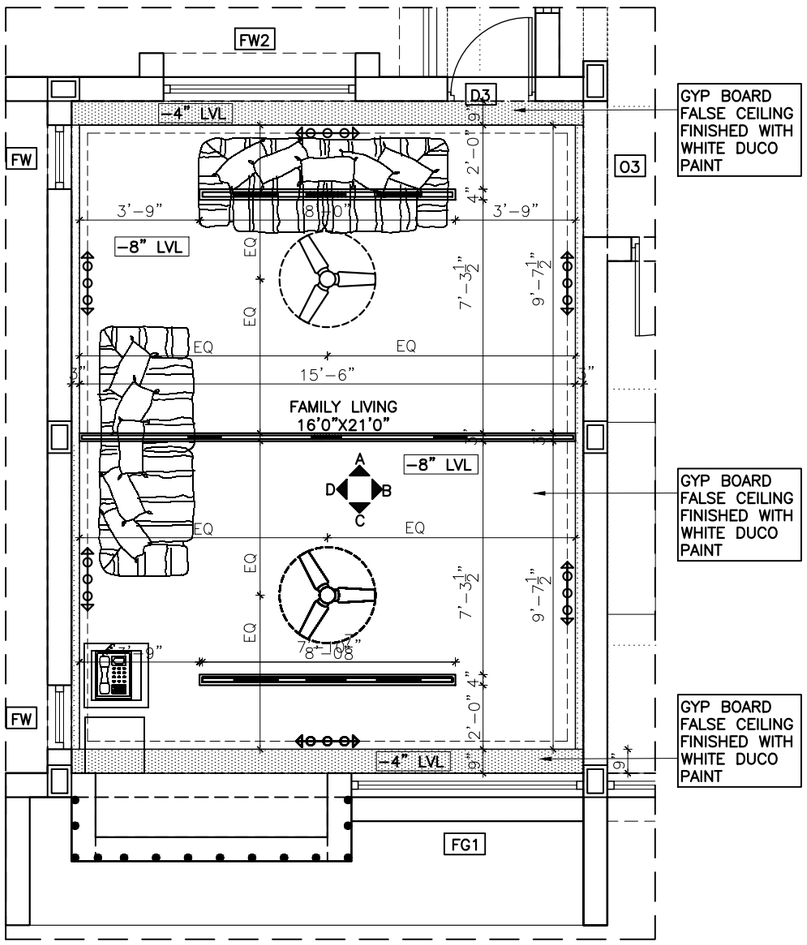

PART PLAN–FAMILY LIVING

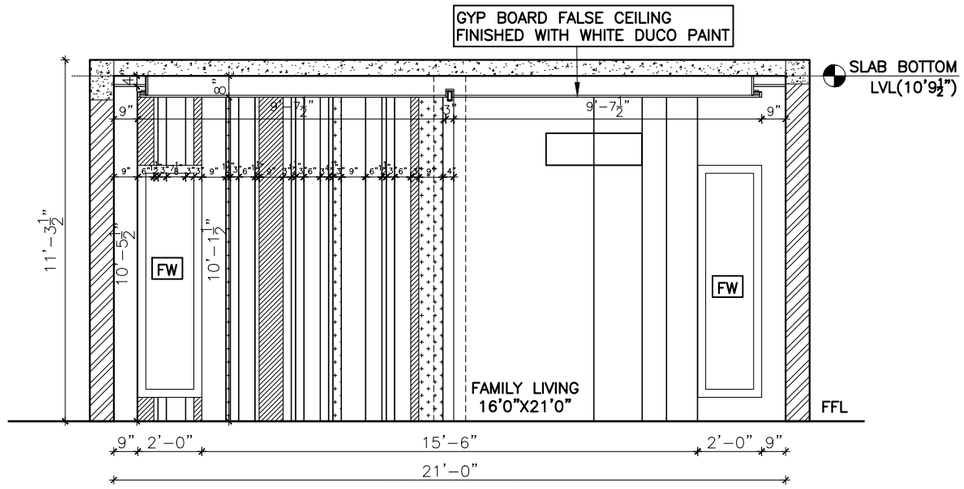

ELEVATION–D

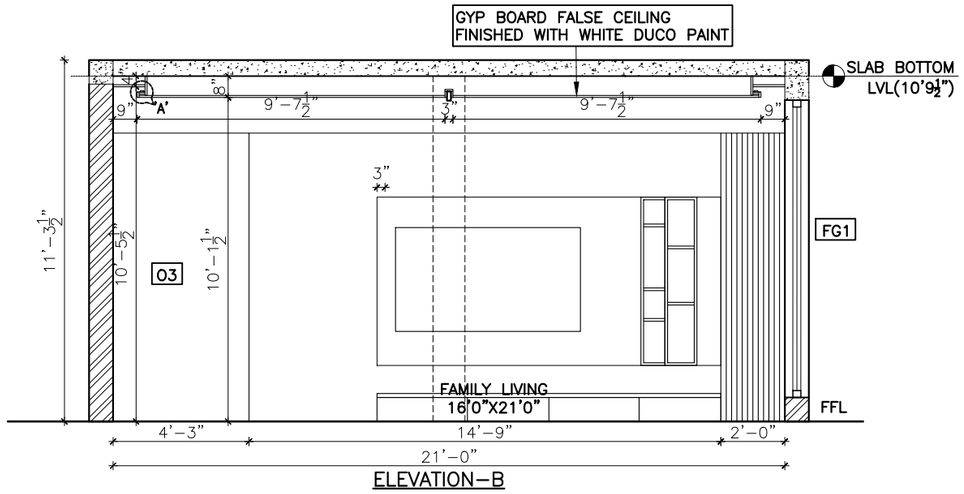

ELEVATION–B

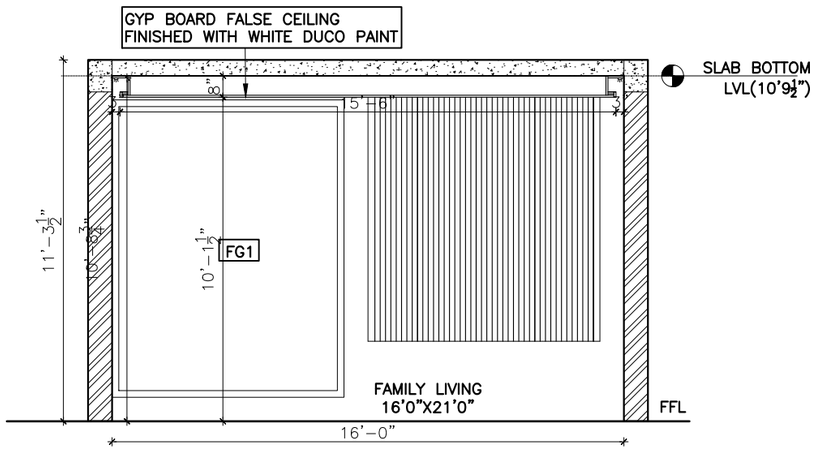

ELEVATION–C

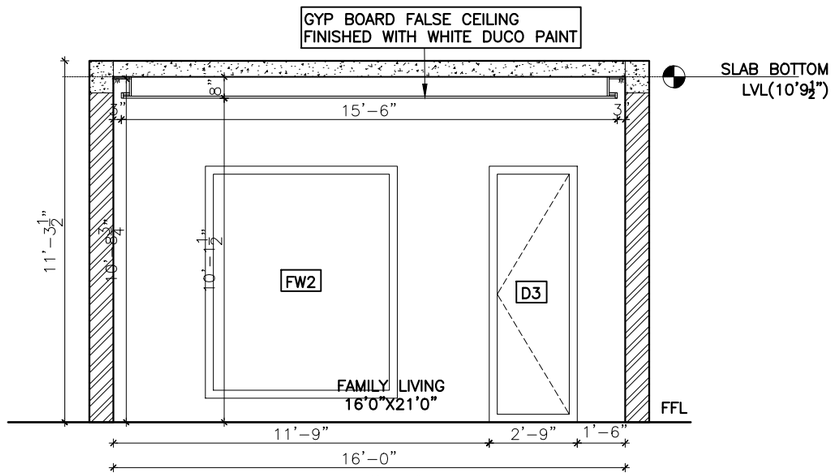

ELEVATION–A

This drawing is the property of ARUN AND ASSOCIATES (A&A) and shall not be passed on to any person not authorised by A&A to recieve it. It shall not be copied or modified in full or part without A&A's prior permission. The details furnished in this drawing are for this PROJECT only.

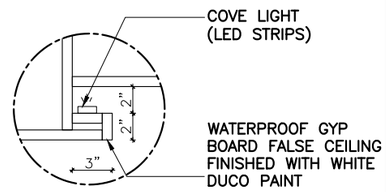

DETAIL–A(1:4)

ELECTRICAL FITTINGS DETAIL

S.NO	SYMBOL	ELECTRICAL FITTINGS
01		Ceiling flush type light fitting
02		Cove Light
03		Ceiling Fan
04		Decorative multi bulb light

CLIENT:
MRS. KALAISELVI ARULKUMAR

PROJECT NAME:
RESIDENCE AT COIMBATORE

DRAWING TITLE:
F.F LIVING ROOM – FALSE CEILING DETAIL

DATE	DWG NO.	DRAWN BY
09.09.22	A2:01	DOREEN S.
SCALE	PROJ CODE	CHECKED BY
1"=6'0"	RES–338–2018	ARUN P.

N

ARUN AND ASSOCIATES
ARCHITECTS & PLANNERS
1289, TRICHY ROAD,
COIMBATORE – 641 018.

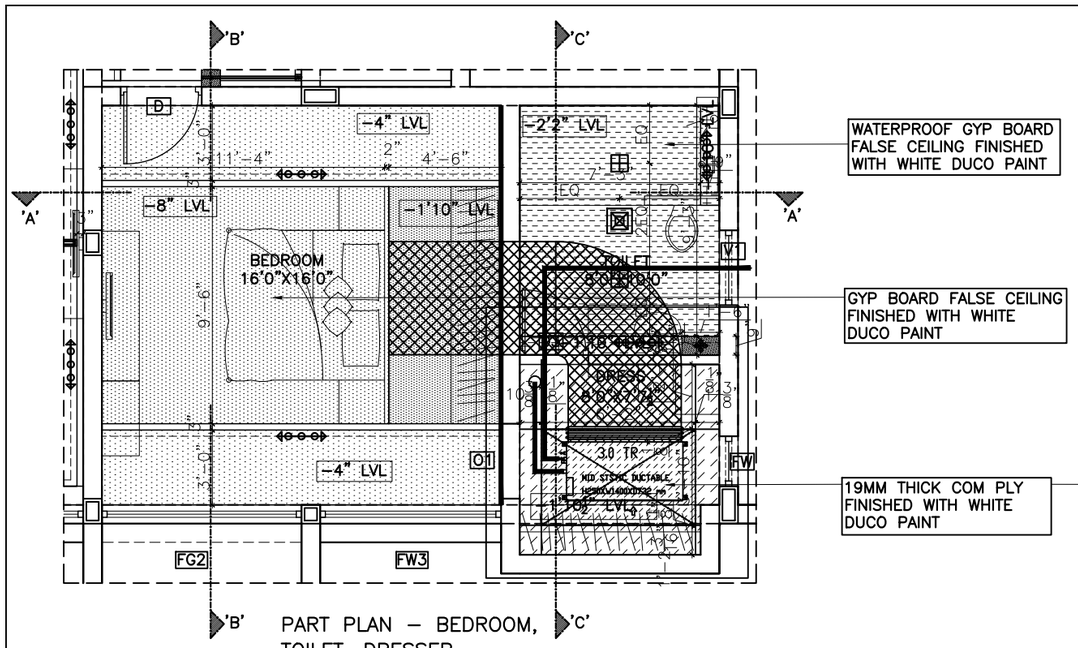

PART PLAN – BEDROOM, TOILET, DRESSER

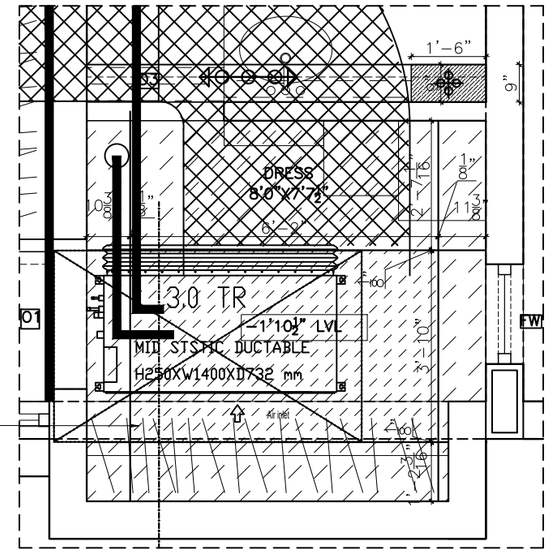

PART PLAN – DRESSER (1:2)

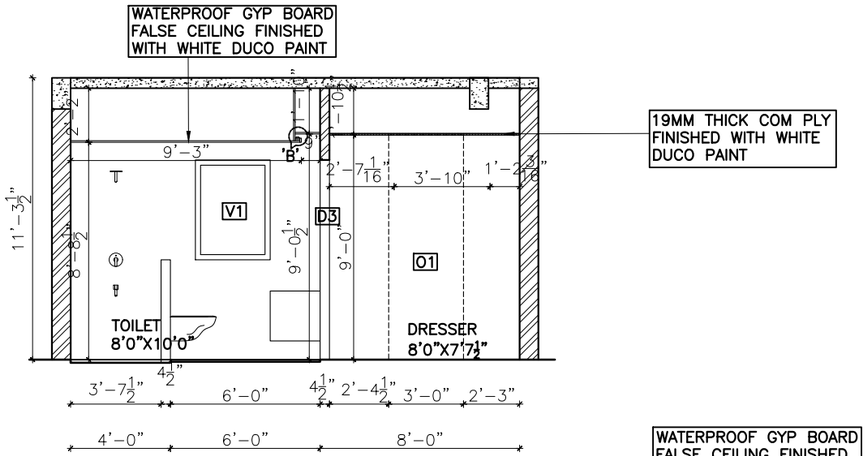

SECTION CC

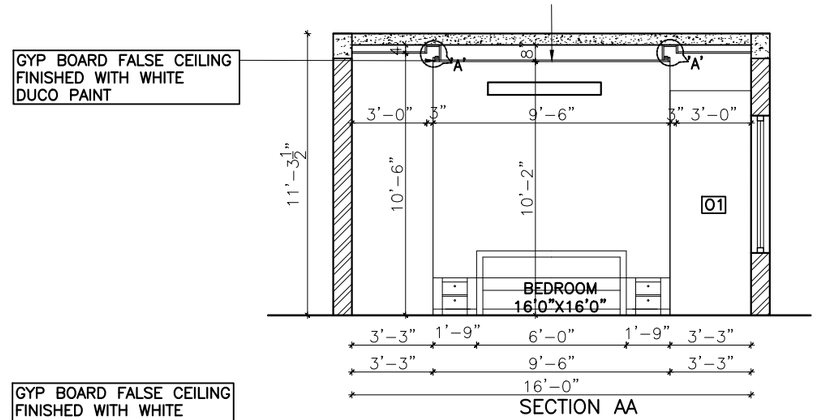

SECTION AA

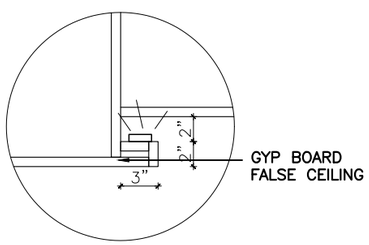

DETAIL–B

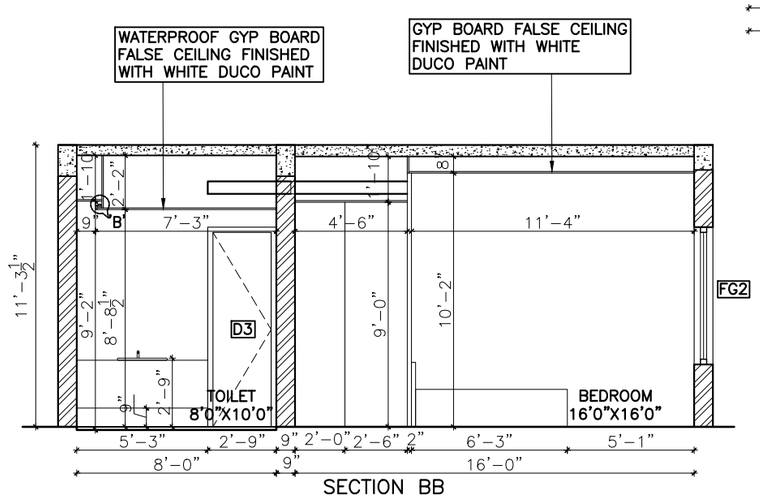

SECTION BB

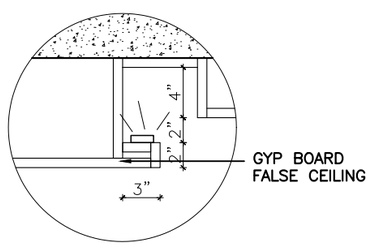

DETAIL–A

This drawing is the property of ARUN AND ASSOCIATES (A&A) and shall not be passed on to any person not authorised by A&A to recieve it. It shall not be copied or modified in full or part without A&A's prior permission. The details furnished in this drawing are for this PROJECT only.

NOTE:
CHANDELIER LOCATION ON FALSE CEILING AS PER LIGHTING CONSULTANT – 19MM THK COM.PLY WITH WHITE DUCO PAINT TO BE PROVIDED

ELECTRICAL FITTINGS DETAIL

S.NO	SYMBOL	ELECTRICAL FITTINGS
01		Ceiling flush type light fitting
02		Cove Light
03		Ceiling Fan
04		Decorative multi bulb light

CLIENT:
MRS. KALAISELVI ARULKUMAR

PROJECT NAME:
RESIDENCE AT COIMBATORE

DRAWING TITLE:
F.F. BEDROOM – FALSE CEILING DETAIL

DATE	DWG NO.	DRAWN BY	
29.09.22	A2:01	DOREEN S	
SCALE	PROJ CODE	CHECKED BY	
1"=6'0"	RES–338–2018	ARUN P.	N

ARUN AND ASSOCIATES
ARCHITECTS & PLANNERS
1289, TRICHY ROAD,
COIMBATORE – 641 018.

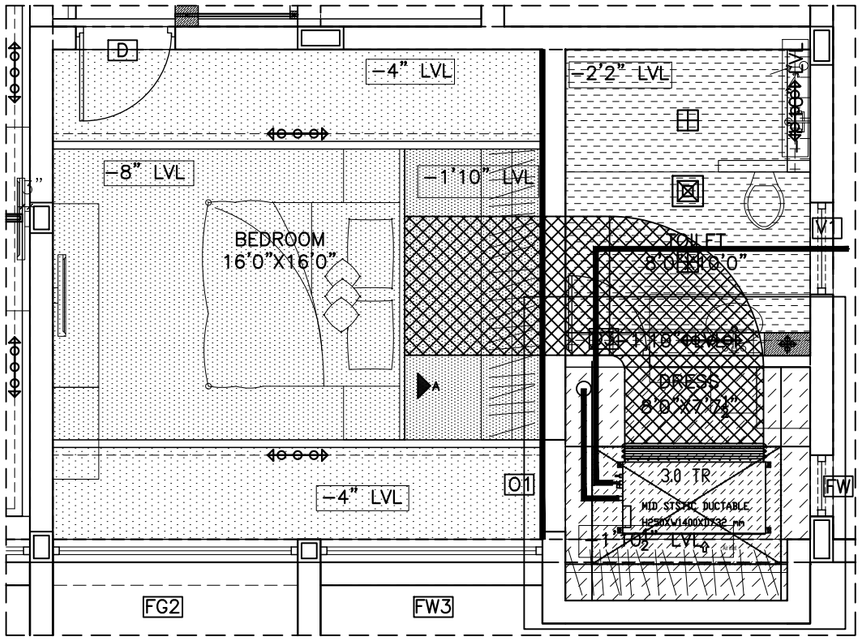

PART PLAN – BEDROOM, DRESSER, TOILET

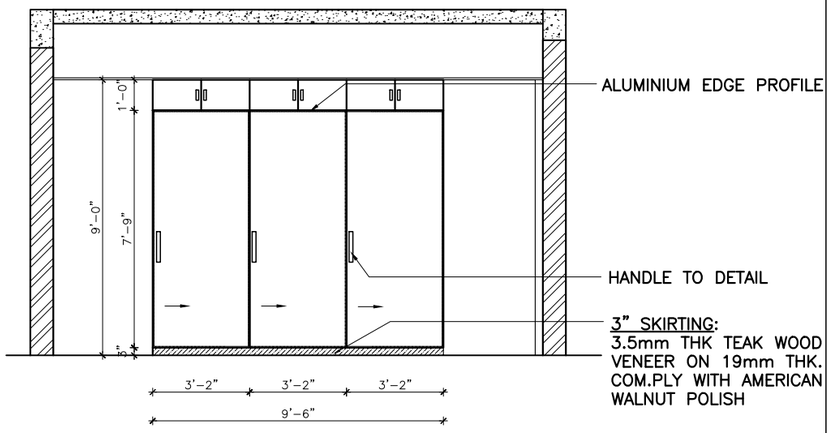

ELEVATION A

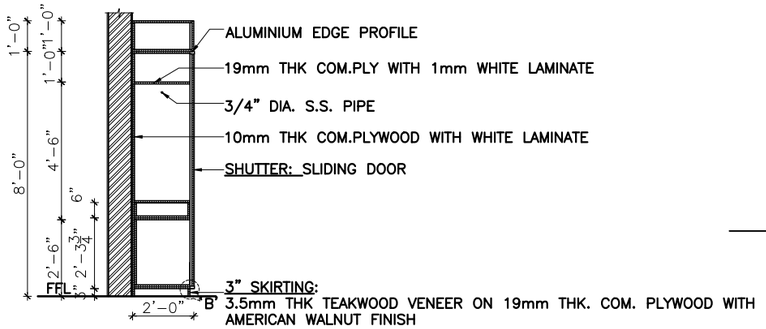

SECTION X

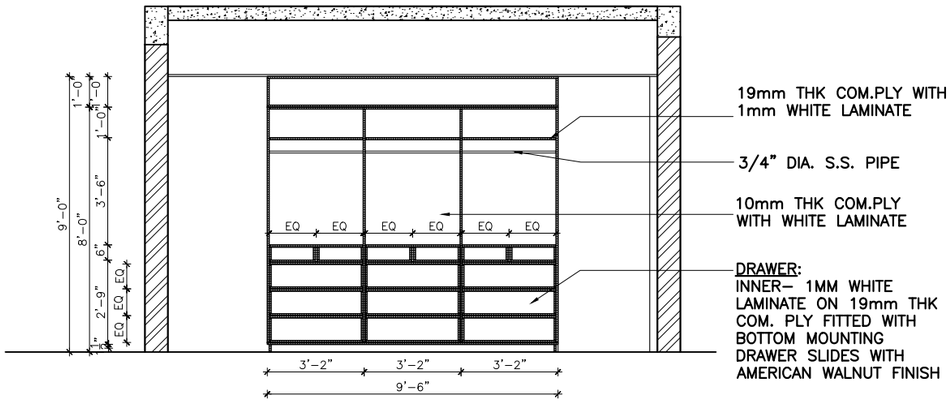

SECTION Y

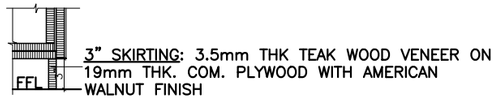

DETAIL–B

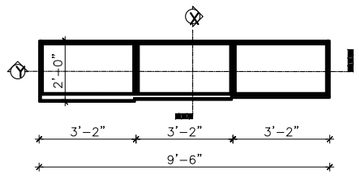

WARDROBE PART PLAN

This drawing is the property of ARUN AND ASSOCIATES (A&A) and shall not be passed on to any person not authorised by A&A to recieve it. It shall not be copied or modified in full or part without A&A's prior permission. The details furnished in this drawing are for this PROJECT only.

CLIENT:
MRS. KALAISELVI ARULKUMAR

PROJECT NAME:
RESIDENCE AT COIMBATORE

DRAWING TITLE:
F.F. BEDROOM – WARDROBE DETAIL

DATE	DWG NO.	DRAWN BY
09.11.22	A2:01	DOREEN S
SCALE	PROJ CODE	CHECKED BY
1"=6'0"	RES–338–2018	ARUN P.

N

ARUN AND ASSOCIATES
ARCHITECTS & PLANNERS
1289, TRICHY ROAD,
COIMBATORE – 641 018.

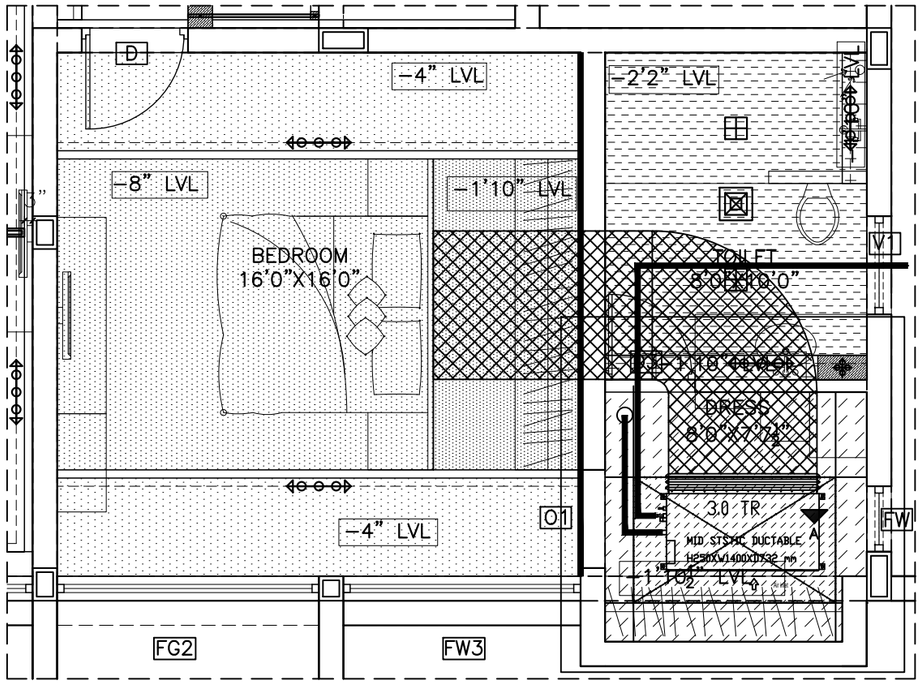

PART PLAN – BEDROOM, TOILET, DRESSER

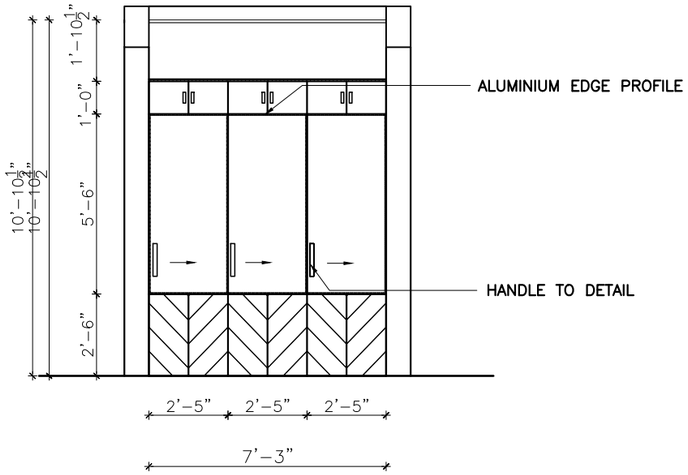

ELEVATION A

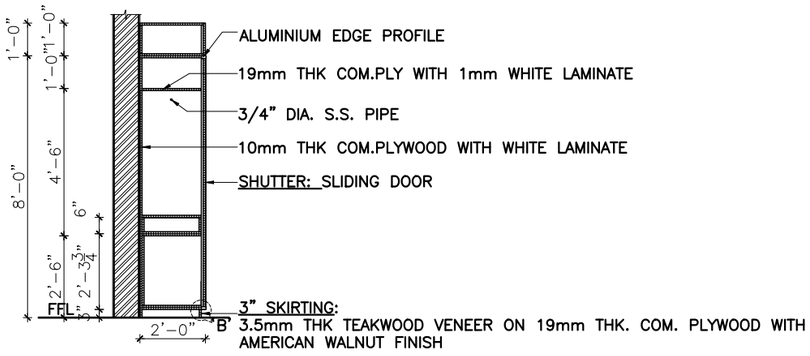

SECTION X

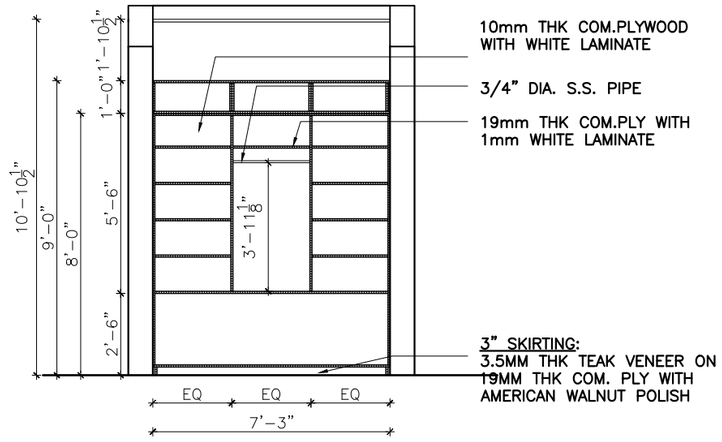

SECTION Y

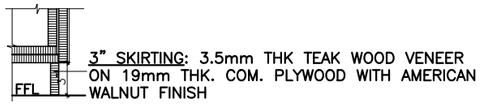

DETAIL–Y

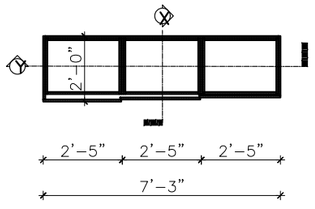

WARDROBE PART PLAN

This drawing is the property of ARUN AND ASSOCIATES (A&A) and shall not be passed on to any person not authorised by A&A to recieve it. It shall not be copied or modified in full or part without A&A's prior permission. The details furnished in this drawing are for this PROJECT only.

CLIENT:
MRS. KALAISELVI ARULKUMAR

PROJECT NAME:
RESIDENCE AT COIMBATORE

DRAWING TITLE:
F.F. BEDROOM – WARDROBE DETAIL

DATE	DWG NO.	DRAWN BY	
09.11.22	A2:01	DOREEN S	
SCALE	PROJ CODE	CHECKED BY	
1"=6'0"	RES–338–2018	ARUN P.	N

ARUN AND ASSOCIATES
ARCHITECTS & PLANNERS
1289, TRICHY ROAD,
COIMBATORE – 641 018.

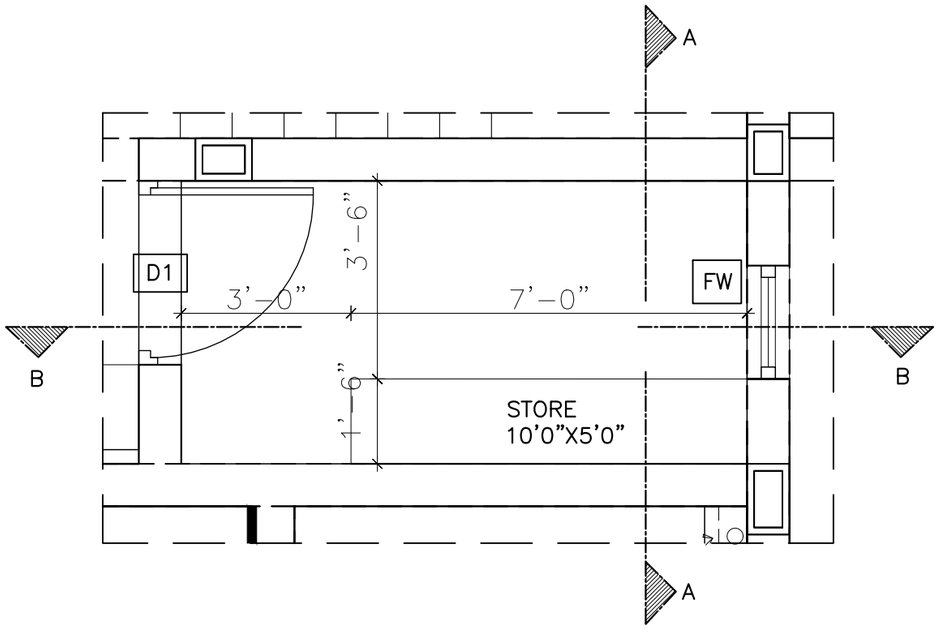

PART PLAN – STORE

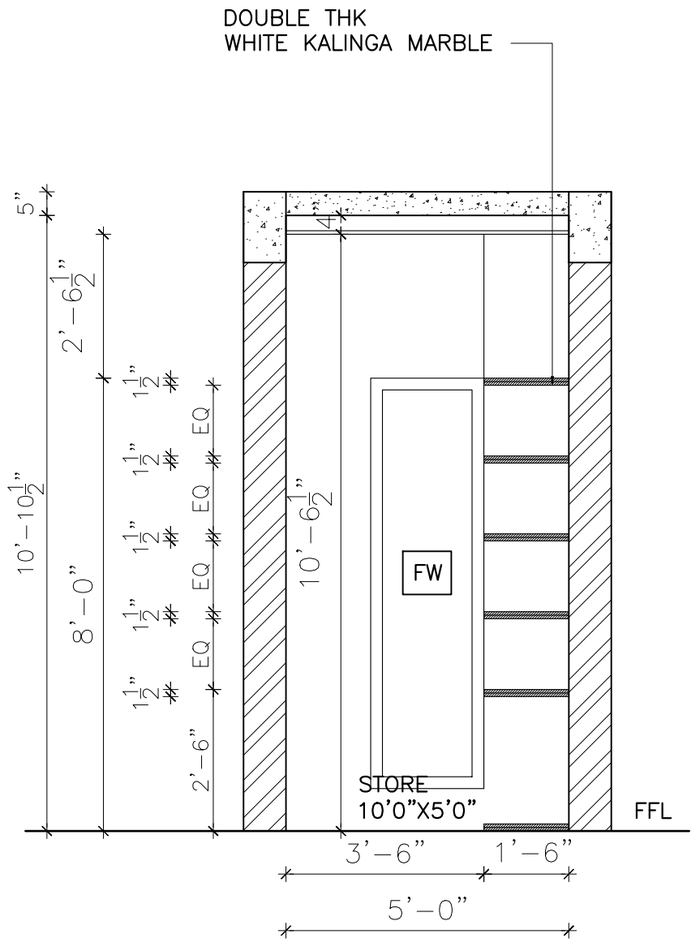

SECTION AA

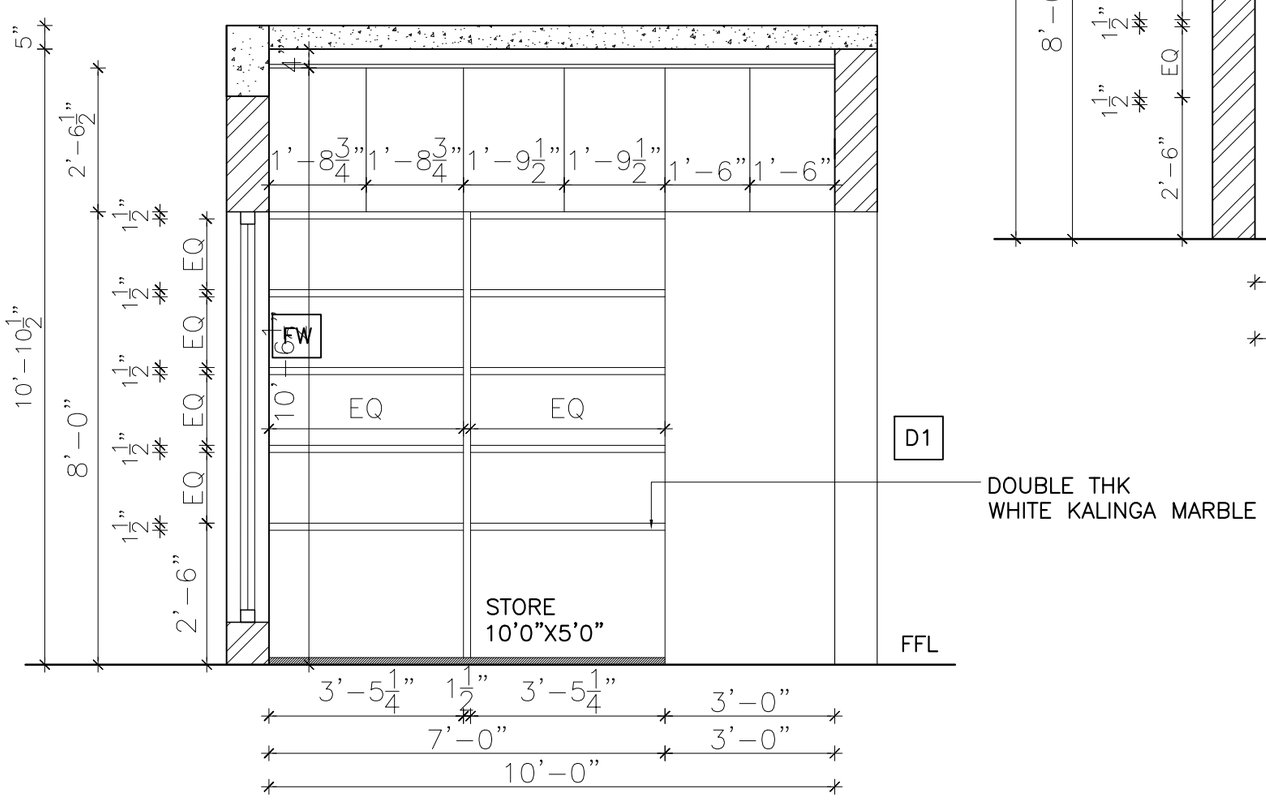

SECTION BB

This drawing is the property of ARUN AND ASSOCIATES (A&A) and shall not be passed on to any person not authorised by A&A to recieve it. It shall not be copied or modified in full or part without A&A's prior permission. The details furnished in this drawing are for this PROJECT only.

REVISIONS:

NO.	DESCRIPTION	CHECKED	DATE

CLIENT:
MRS KALAISELVI ARULKUMAR

PROJECT NAME:
RESIDENCE AT COIMBATORE

DRAWING TITLE:
STORAGE DETAIL – F.F. STORE ROOM

DATE	DWG NO.	DRAWN BY
19.09.22	A4:01	DOREEN S.
SCALE	PROJ CODE	CHECKED BY
1"=4'0"	RES–332–2017	ARUN P.

N

ARUN AND ASSOCIATES
ARCHITECTS & PLANNERS
1289, TRICHY ROAD,
COIMBATORE – 641 018.

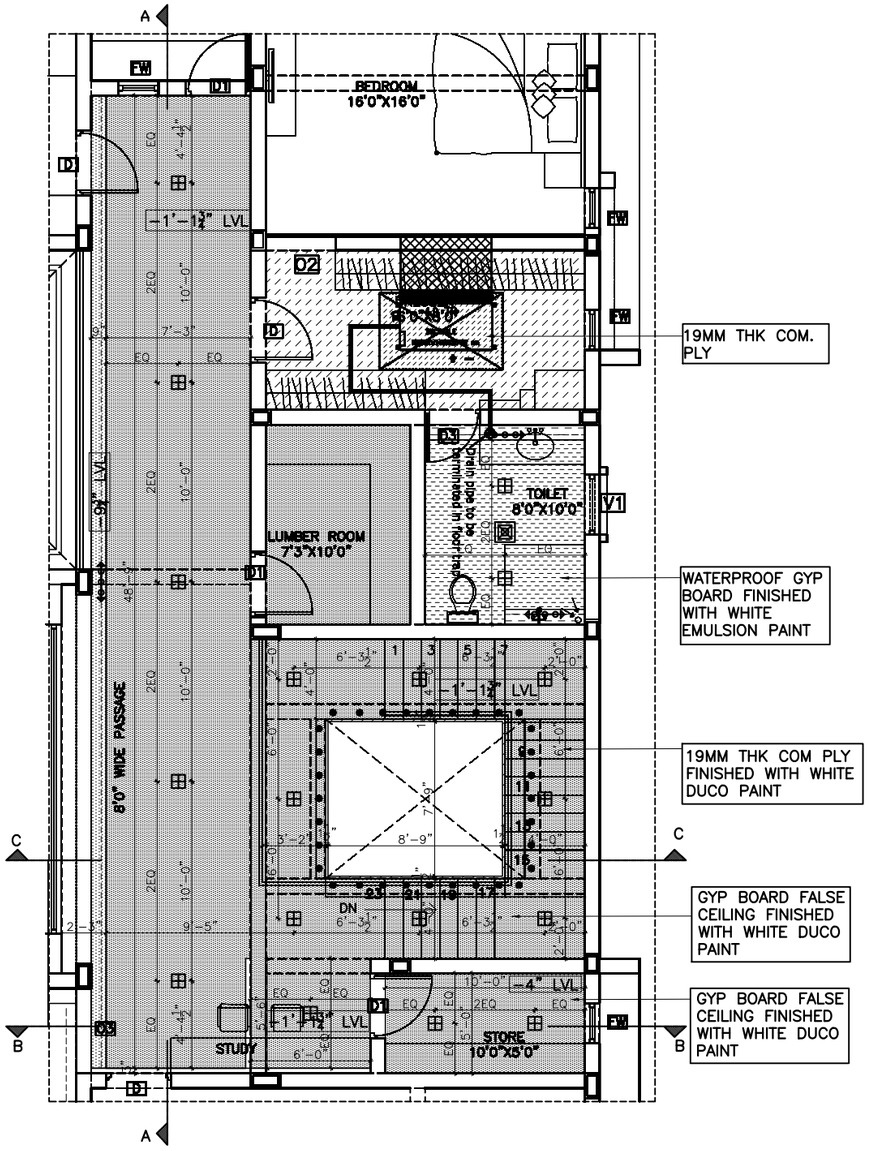

PART PLAN – PASSAGE AND STAIRCASE

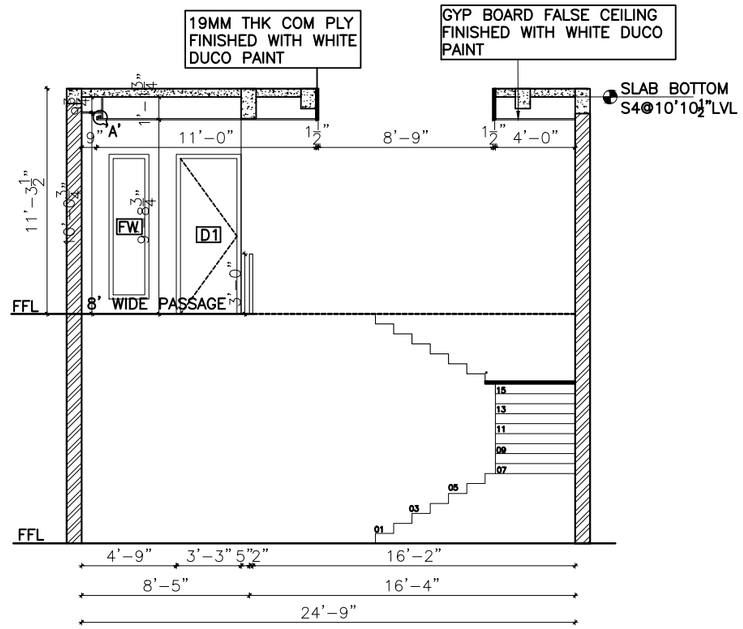

SECTION CC

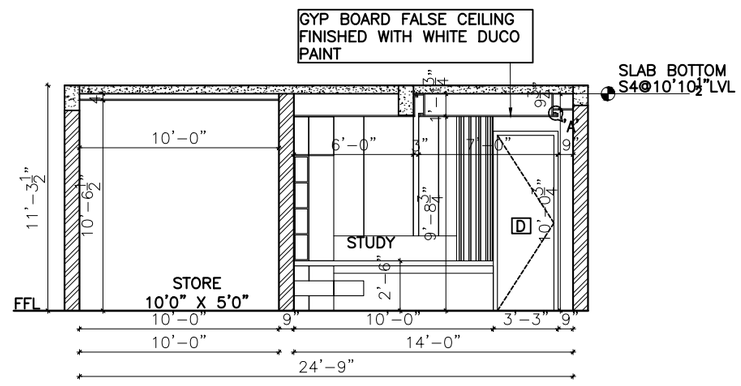

SECTION BB

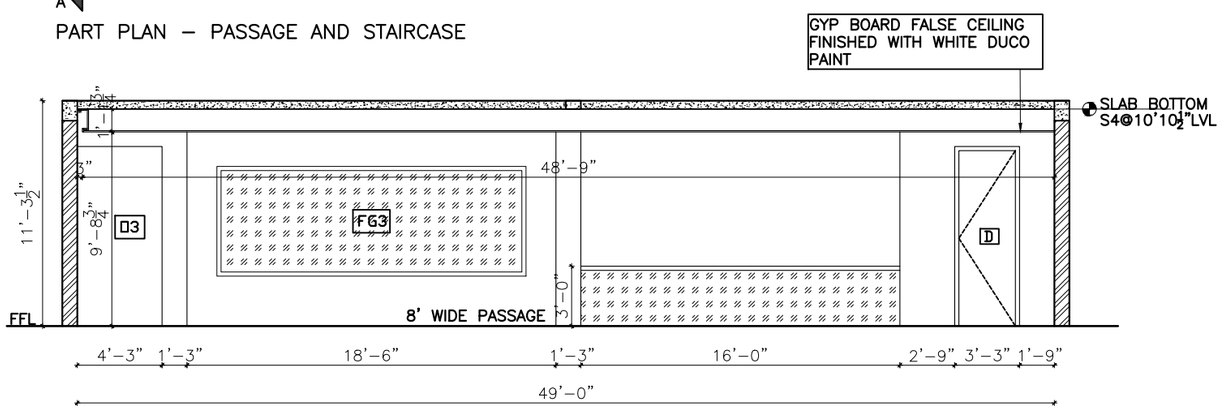

SECTION AA

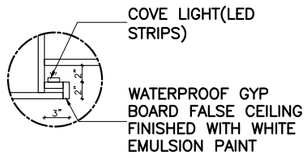

DETAIL–A(1:4)

This drawing is the property of ARUN AND ASSOCIATES (A&A) and shall not be passed on to any person not authorised by A&A to recieve it. It shall not be copied or modified in full or part without A&A's prior permission. The details furnished in this drawing are for this PROJECT only.

ELECTRICAL FITTINGS DETAIL

S.NO	SYMBOL	ELECTRICAL FITTINGS
01		Ceiling flush type light fitting
02		Cove Light
03		Ceiling Fan
04		Decorative multi bulb light
05		Exhaust fan

CLIENT:
MRS. KALAISELVI ARULKUMAR

PROJECT NAME:
RESIDENCE AT COIMBATORE

DRAWING TITLE:
F.F PASSAGE – FALSE CEILING DETAIL

DATE	DWG NO.	DRAWN BY	
10.09.22	A2:01	DOREEN S.	
SCALE	PROJ CODE	CHECKED BY	
1"=6'0"	RES–338–2018	ARUN P.	N

ARUN AND ASSOCIATES
ARCHITECTS & PLANNERS
1289, TRICHY ROAD,
COIMBATORE – 641 018.

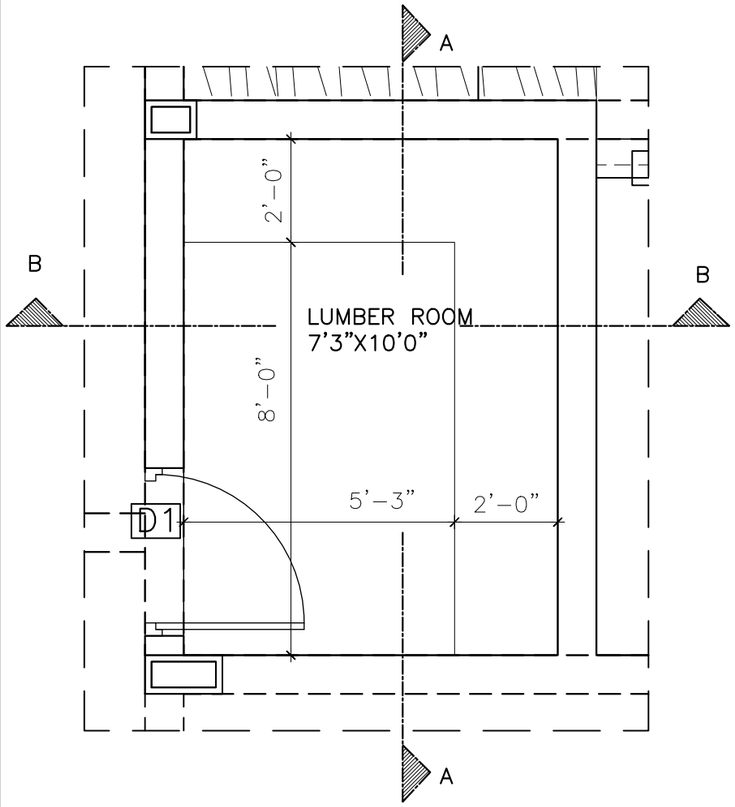

PART PLAN – LUMBER ROOM

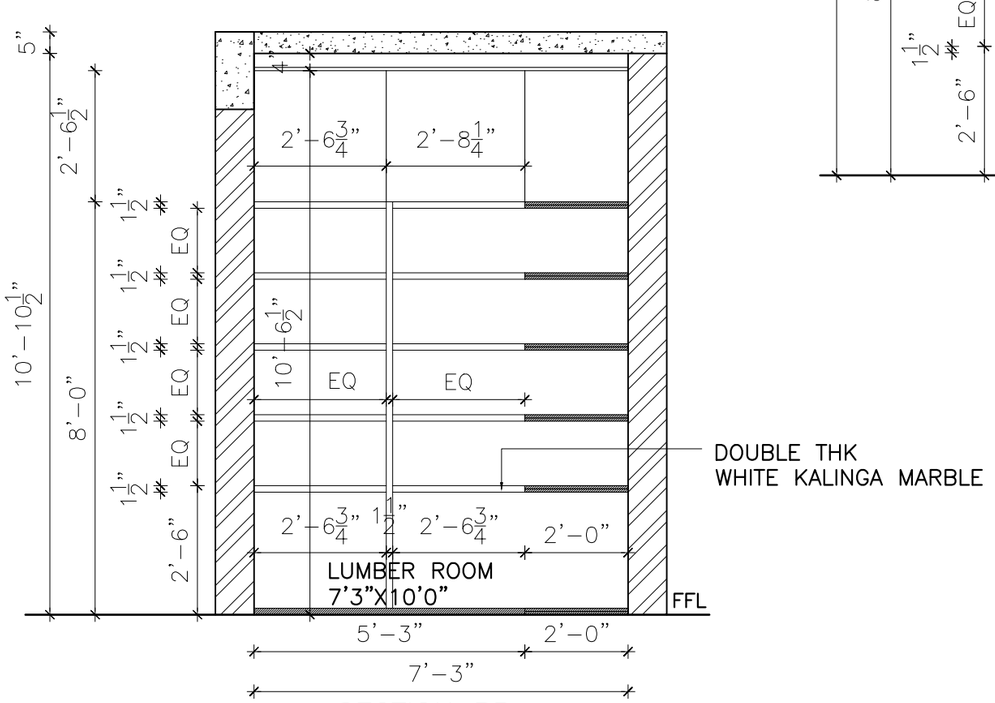

SECTION BB

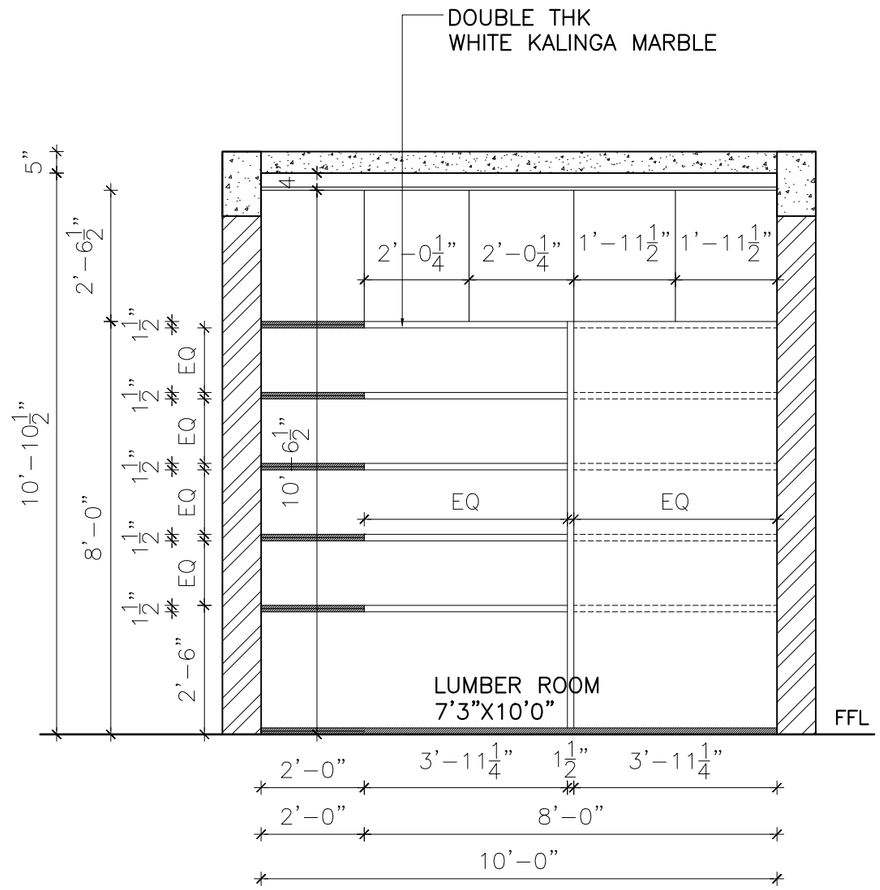

SECTION AA

This drawing is the property of ARUN AND ASSOCIATES (A&A) and shall not be passed on to any person not authorised by A&A to recieve it. It shall not be copied or modified in full or part without A&A's prior permission. The details furnished in this drawing are for this PROJECT only.

REVISIONS:

NO.	DESCRIPTION	CHECKED	DATE

CLIENT:

MRS. KALAISELVI ARULKUMAR

PROJECT NAME:

RESIDENCE AT COIMBATORE

DRAWING TITLE:

STORAGE DETAIL – F.F. LUMBER ROOM

DATE	DWG NO.	DRAWN BY
19.09.22	A4:01	DOREEN S.
SCALE	PROJ CODE	CHECKED BY
1"=4'0"	RES-332-2017	ARUN P.

N

ARUN AND ASSOCIATES

ARCHITECTS & PLANNERS

1289, TRICHY ROAD,

COIMBATORE – 641 018.

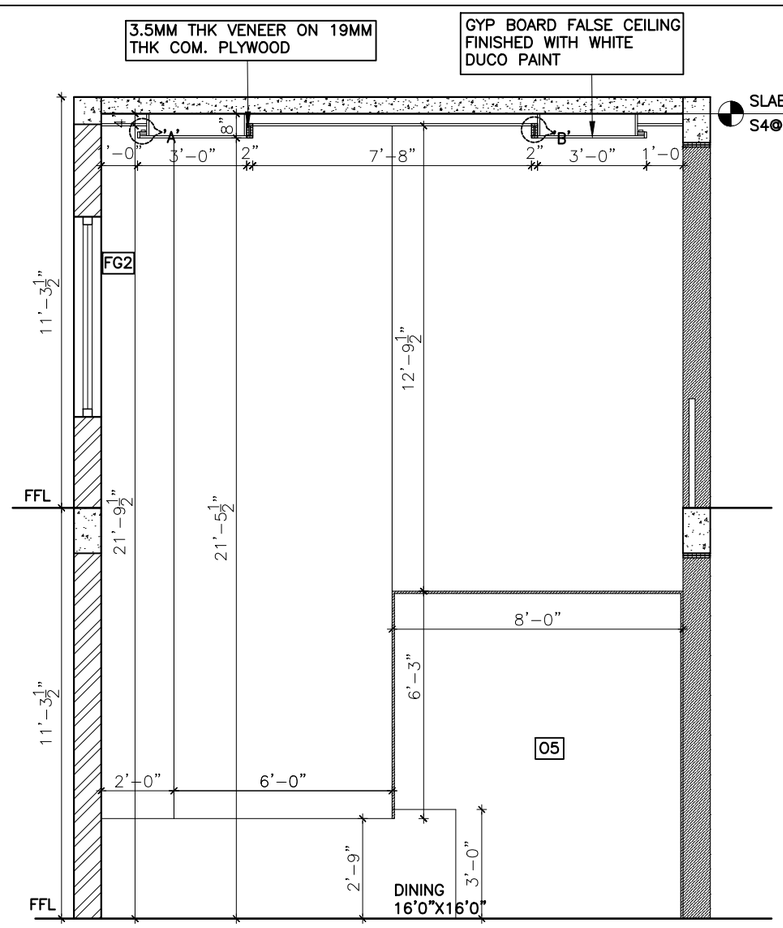

SECTION AA

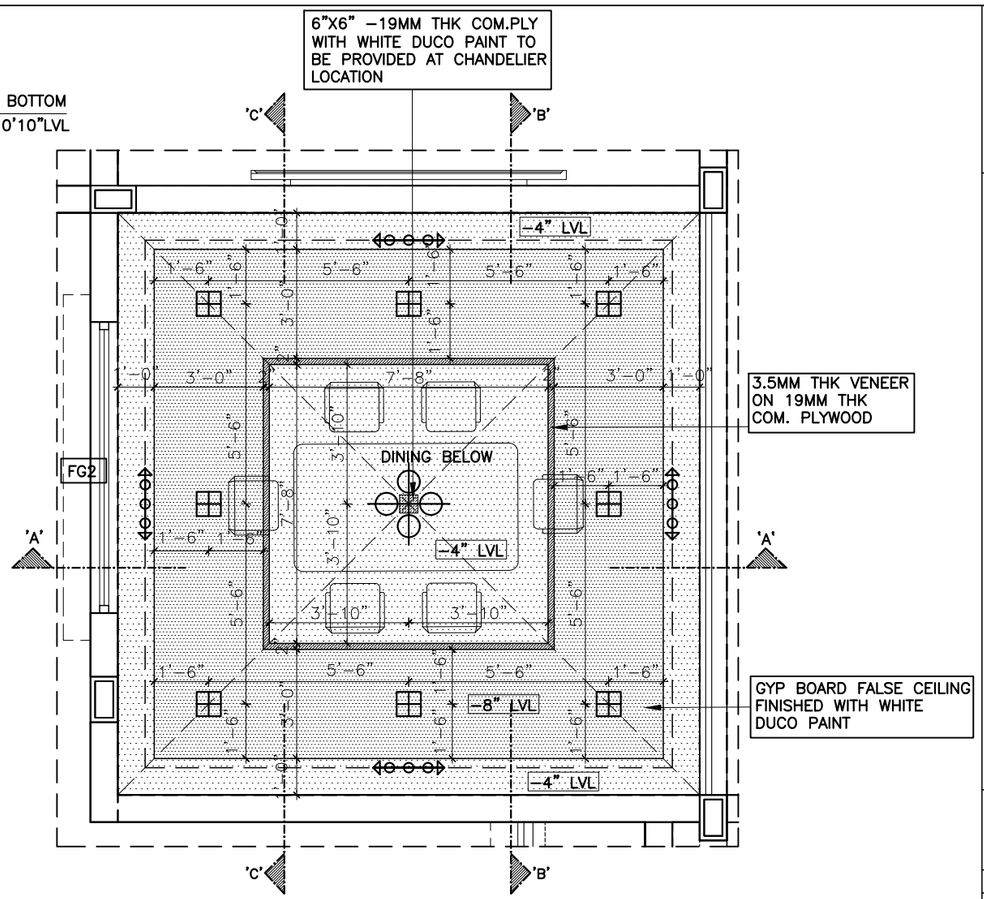

PART PLAN – DINING

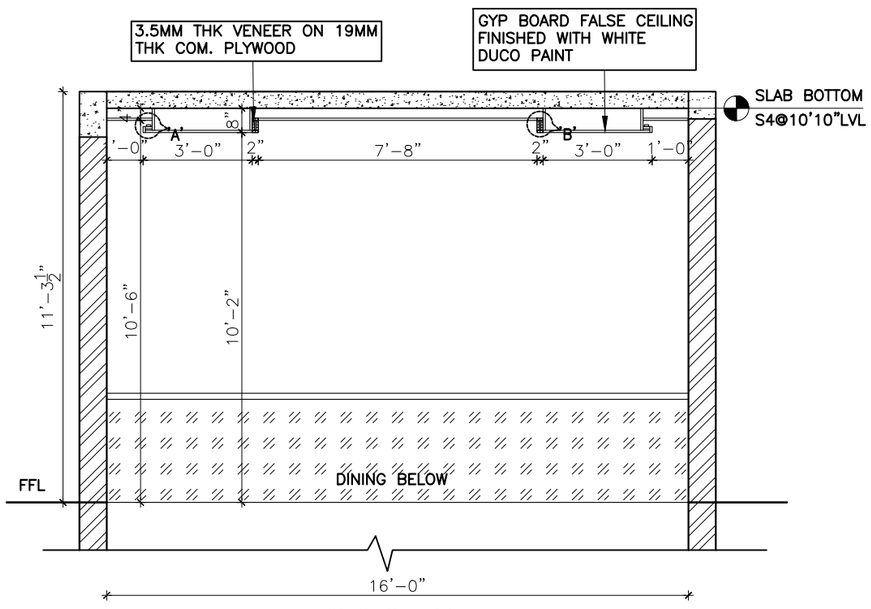

SECTION BB

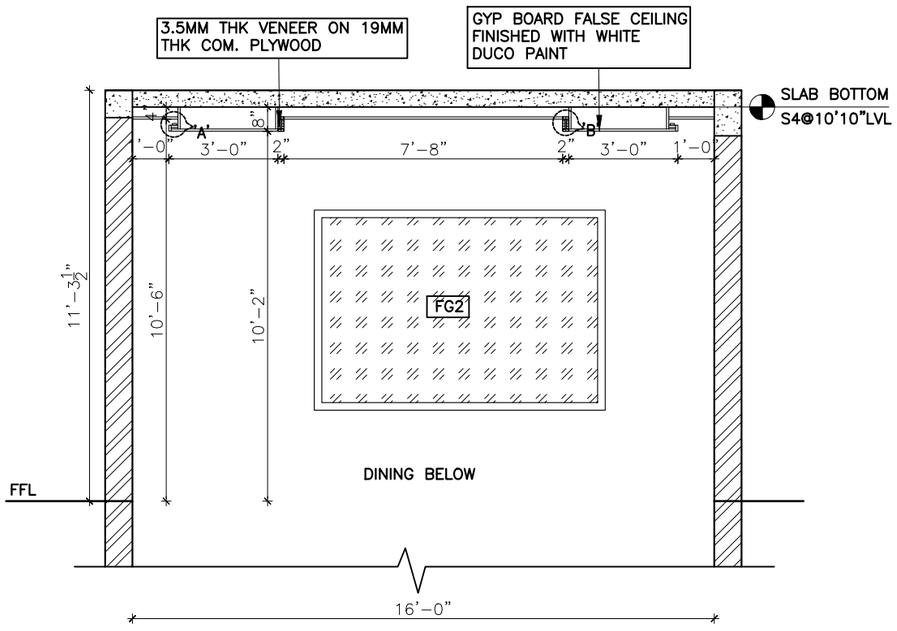

SECTION CC

This drawing is the property of ARUN AND ASSOCIATES (A&A) and shall not be passed on to any person not authorised by A&A to recieve it. It shall not be copied or modified in full or part without A&A's prior permission. The details furnished in this drawing are for this PROJECT only.

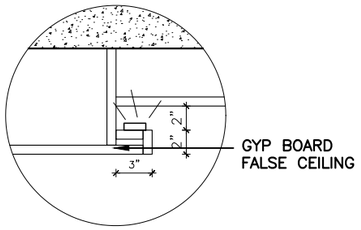

DETAIL–A

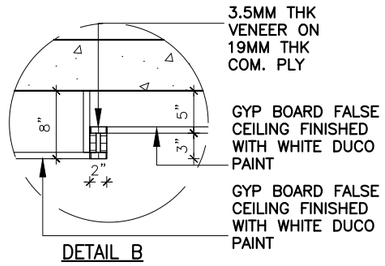

DETAIL B

NOTE:
CHANDELIER LOCATION ON FALSE CEILING AS PER LIGHTING CONSULTANT – 19MM THK COM.PLY WITH WHITE DUCO PAINT TO BE PROVIDED

ELECTRICAL FITTINGS DETAIL

S.NO	SYMBOL	ELECTRICAL FITTINGS
01		Ceiling flush type light fitting
02		Cove Light
03		Ceiling Fan
04		Decorative multi bulb light

CLIENT:
MRS. KALAISELVI ARULKUMAR

PROJECT NAME:
RESIDENCE AT COIMBATORE

DRAWING TITLE:
F.F. DINING – FALSE CEILING DETAIL

DATE	DWG NO.	DRAWN BY
16.09.22	A2:01	DOREEN S
SCALE	PROJ CODE	CHECKED BY
1"=6'0"	RES–338–2018	ARUN P.

N

ARUN AND ASSOCIATES
ARCHITECTS & PLANNERS
1289, TRICHY ROAD,
COIMBATORE – 641 018.

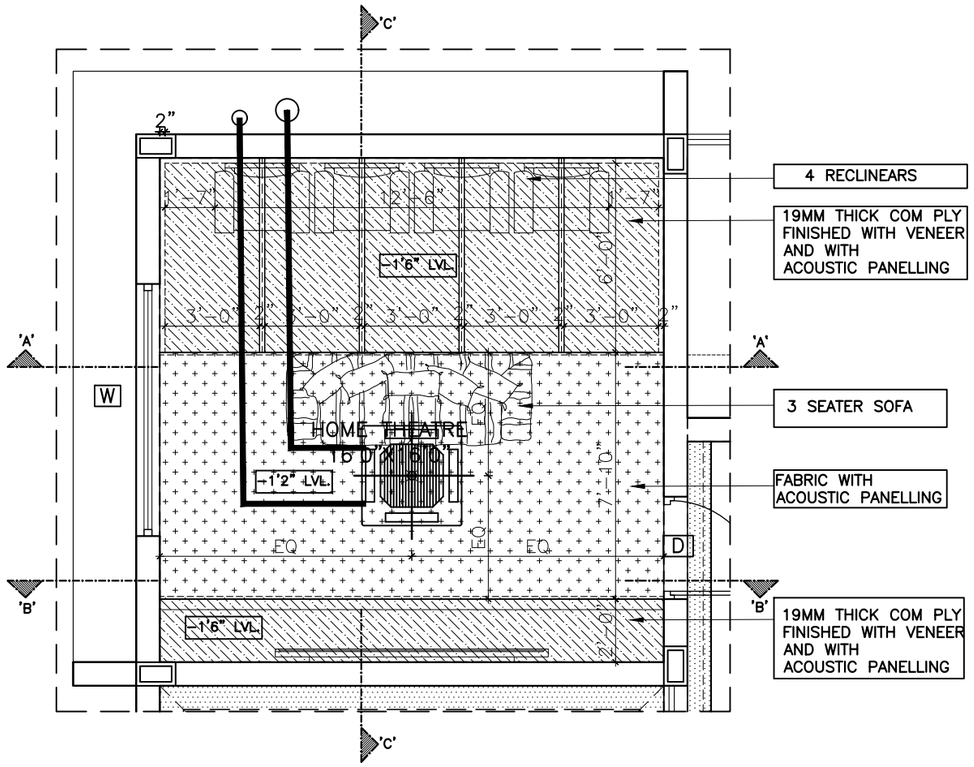

PART PLAN – HOME THEATER

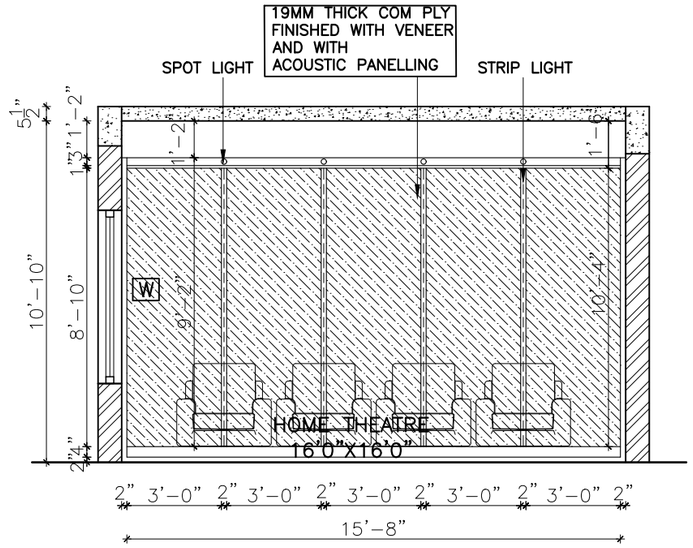

SECTION AA

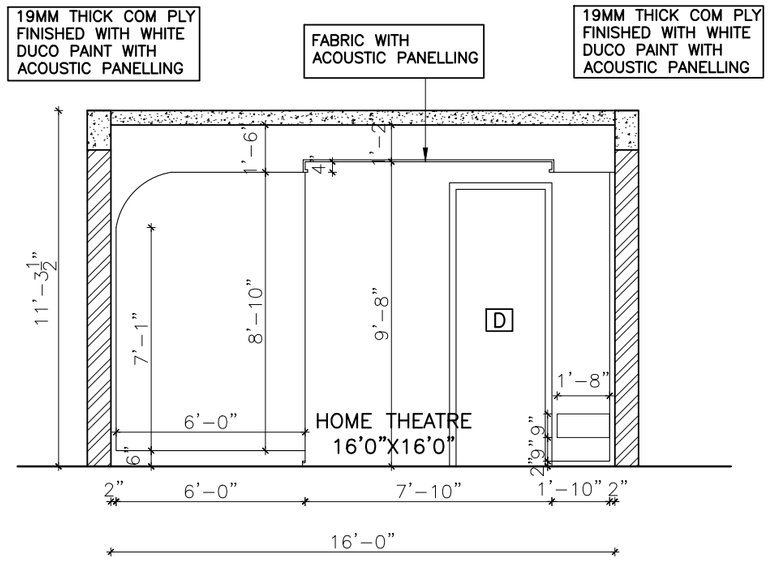

SECTION CC

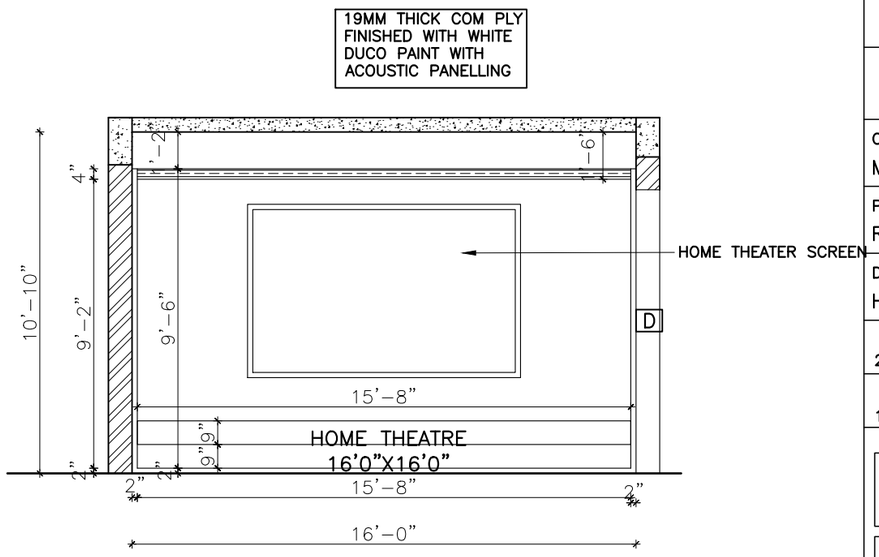

SECTION BB

This drawing is the property of ARUN AND ASSOCIATES (A&A) and shall not be passed on to any person not authorised by A&A to recieve it. It shall not be copied or modified in full or part without A&A's prior permission. The details furnished in this drawing are for this PROJECT only.

NOTE:

CHANDELIER LOCATION ON FALSE CEILING AS PER LIGHTING CONSULTANT – 19MM THK COM.PLY WITH WHITE DUCO PAINT TO BE PROVIDED

ELECTRICAL FITTINGS DETAIL

S.NO	SYMBOL	ELECTRICAL FITTINGS
01		Ceiling flush type light fitting
02		Cove Light
03		Ceiling Fan
04		Decorative multi bulb light

CLIENT:
MRS. KALAISELVI ARULKUMAR

PROJECT NAME:
RESIDENCE AT COIMBATORE

DRAWING TITLE:
HOME THEATER – FALSE CEILING DETAIL

DATE	DWG NO.	DRAWN BY
24.09.22	A2:01	DOREEN S
SCALE	PROJ CODE	CHECKED BY
1"=6'0"	RES–338–2018	ARUN P.

N

ARUN AND ASSOCIATES
ARCHITECTS & PLANNERS
1289, TRICHY ROAD,
COIMBATORE – 641 018.

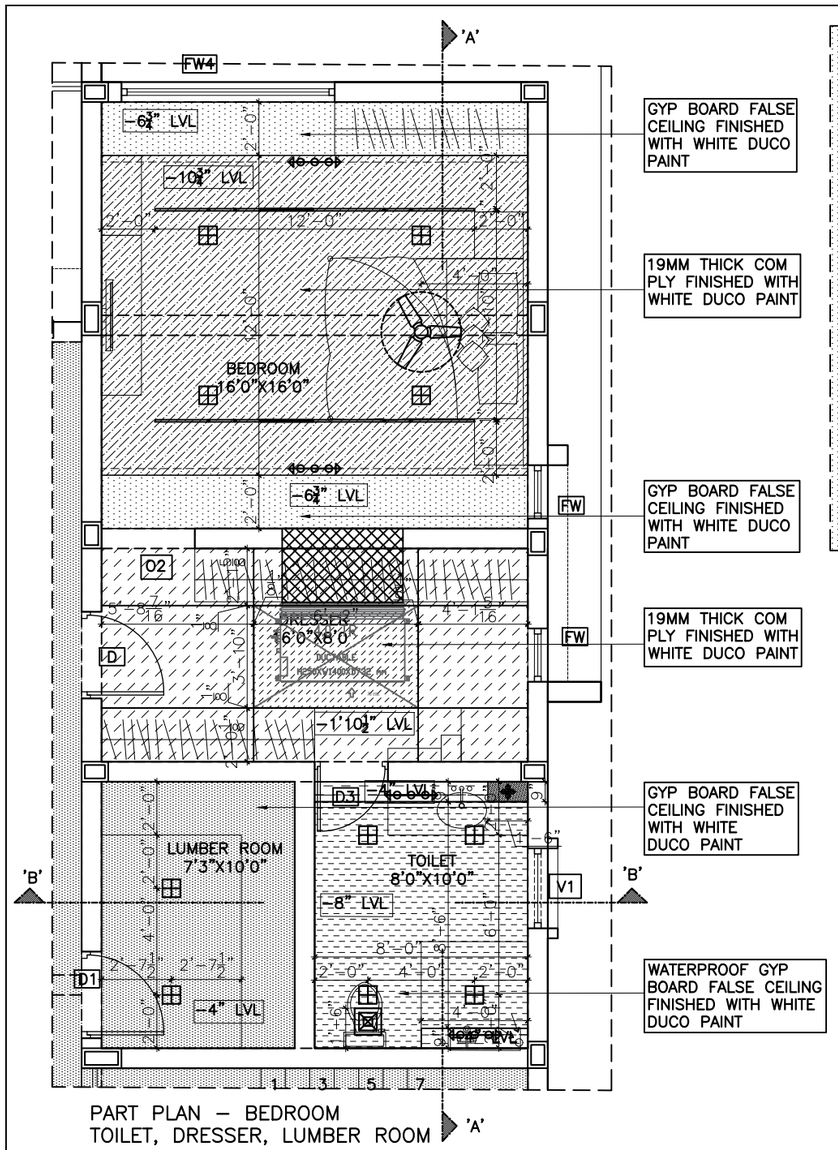

PART PLAN – BEDROOM
TOILET, DRESSER, LUMBER ROOM

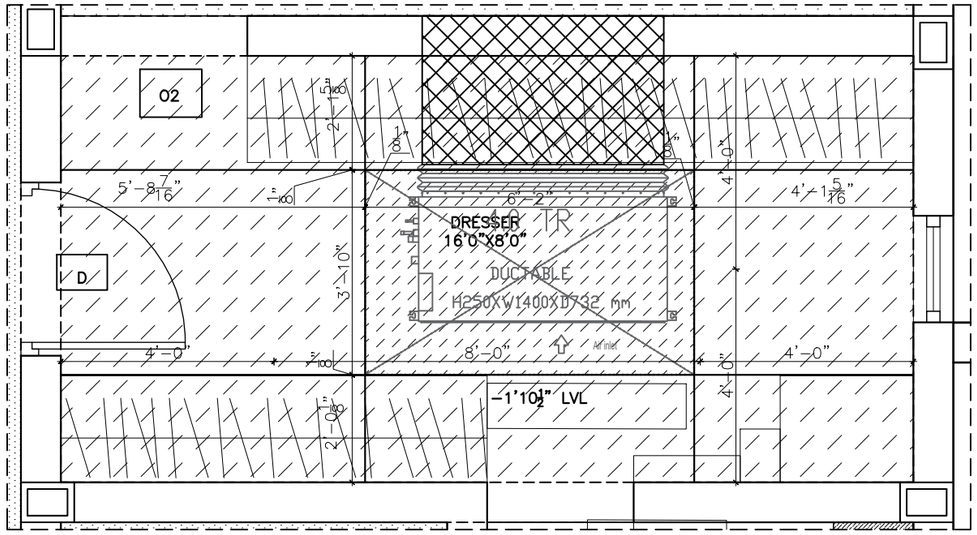

PART PLAN – DRESSER (1:2)

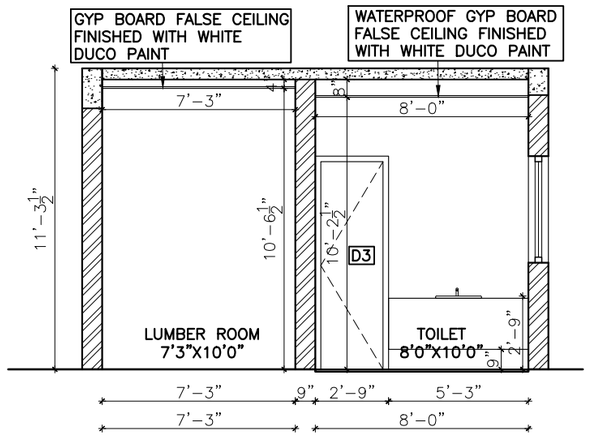

SECTION BB

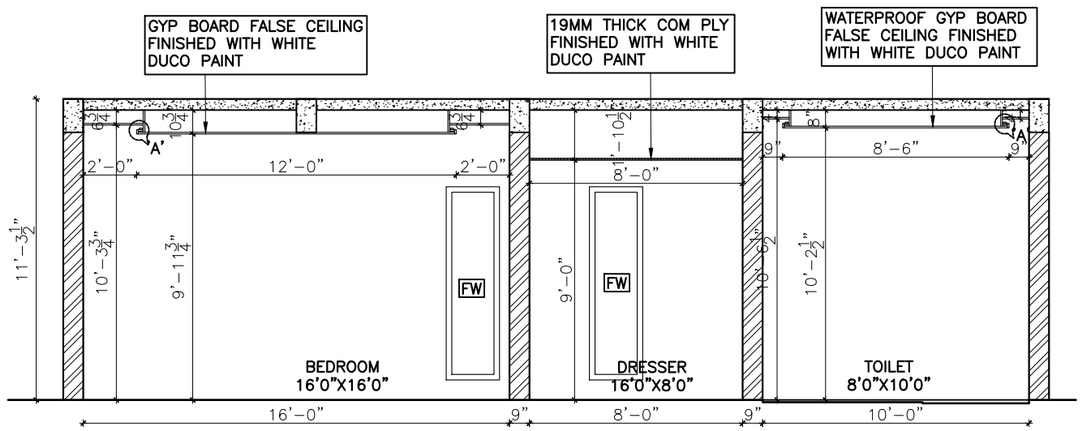

SECTION AA

This drawing is the property of ARUN AND ASSOCIATES (A&A) and shall not be passed on to any person not authorised by A&A to recieve it. It shall not be copied or modified in full or part without A&A's prior permission. The details furnished in this drawing are for this PROJECT only.

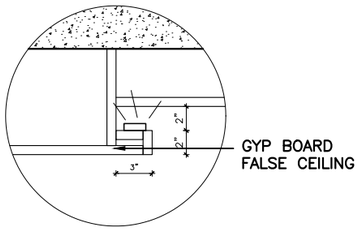

DETAIL–A

NOTE:
CHANDELIER LOCATION ON FALSE CEILING AS PER LIGHTING CONSULTANT – 19MM THK COM.PLY WITH WHITE DUCO PAINT TO BE PROVIDED

ELECTRICAL FITTINGS DETAIL

S.NO	SYMBOL	ELECTRICAL FITTINGS
01		Ceiling flush type light fitting
02		Cove Light
03		Ceiling Fan
04		Decorative multi bulb light

CLIENT:
MRS. KALAISELVI ARULKUMAR

PROJECT NAME:
RESIDENCE AT COIMBATORE

DRAWING TITLE:
BEDROOM – FALSE CEILING DETAIL

DATE	DWG NO.	DRAWN BY
29.09.22	A2:01	DOREEN S
SCALE	PROJ CODE	CHECKED BY
1"=6'0"	RES–338–2018	ARUN P.

N

ARUN AND ASSOCIATES
ARCHITECTS & PLANNERS
1289, TRICHY ROAD,
COIMBATORE – 641 018.

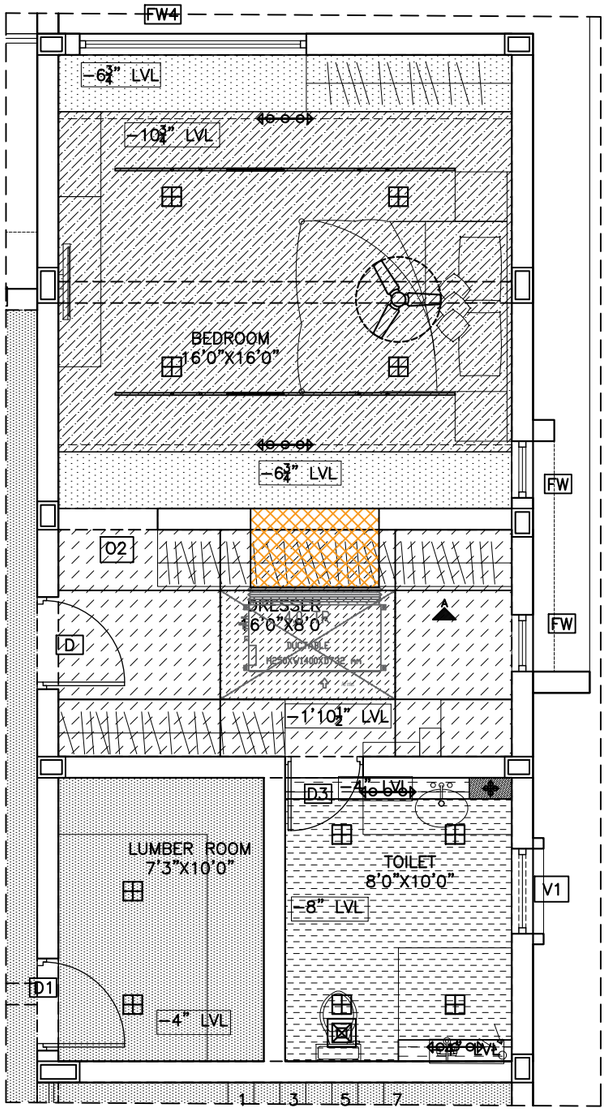

PART PLAN – BEDROOM, DRESSER, TOILET

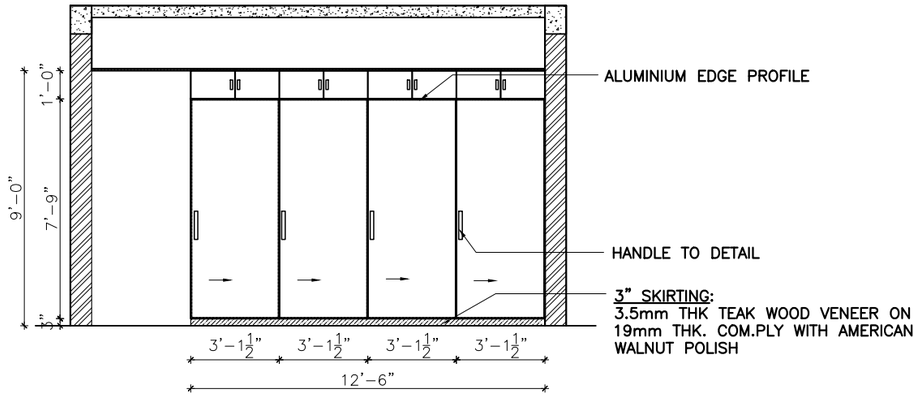

ELEVATION A

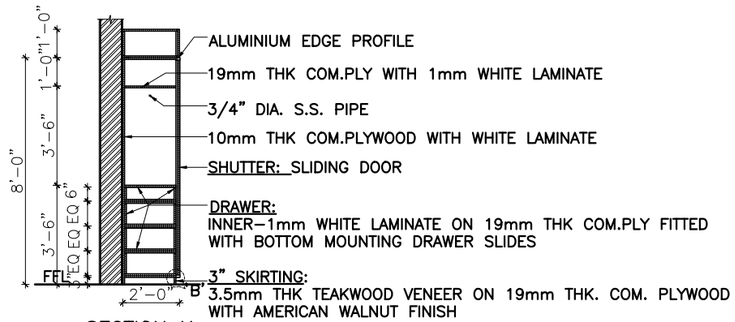

SECTION X

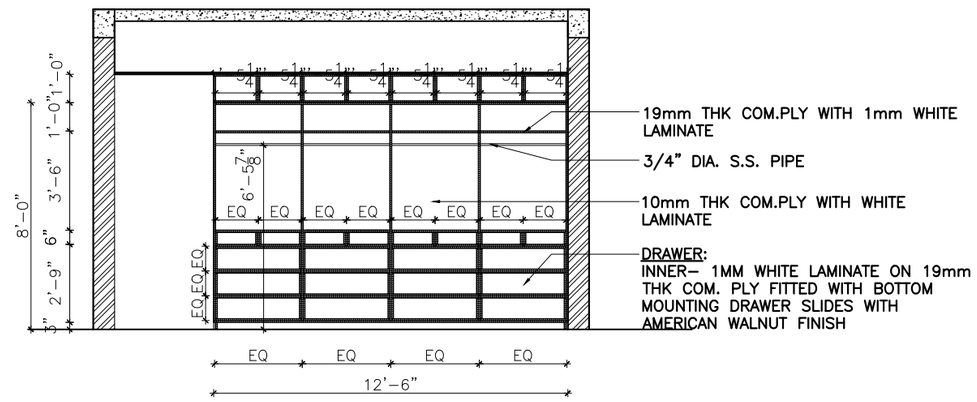

SECTION Y

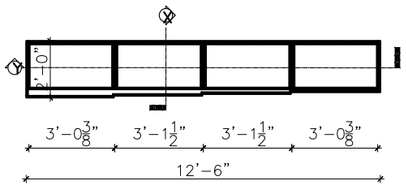

WARDROBE PART PLAN

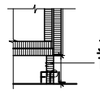

3" SKIRTING: 3.5mm THK TEAK WOOD VENEER ON 19mm THK. COM. PLYWOOD WITH AMERICAN WALNUT FINISH

DETAIL–B

This drawing is the property of ARUN AND ASSOCIATES (A&A) and shall not be passed on to any person not authorised by A&A to recieve it. It shall not be copied or modified in full or part without A&A's prior permission. The details furnished in this drawing are for this PROJECT only.

CLIENT:
MRS. KALAISELVI ARULKUMAR

PROJECT NAME:
RESIDENCE AT COIMBATORE

DRAWING TITLE:
G.F. BEDROOM 1 DRESSER – WARDROBE DETAIL

DATE	DWG NO.	DRAWN BY
29.09.22	A2:01	DOREEN S
SCALE	PROJ CODE	CHECKED BY
1"=6'0"	RES–338–2018	ARUN P.

N

ARUN AND ASSOCIATES
ARCHITECTS & PLANNERS
1289, TRICHY ROAD,
COIMBATORE – 641 018.

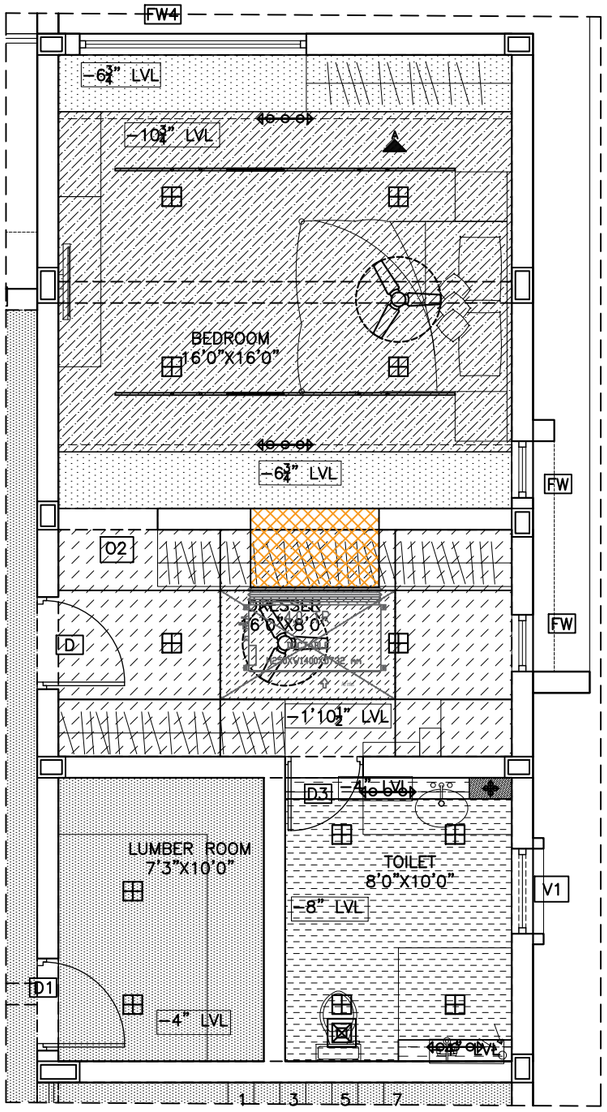

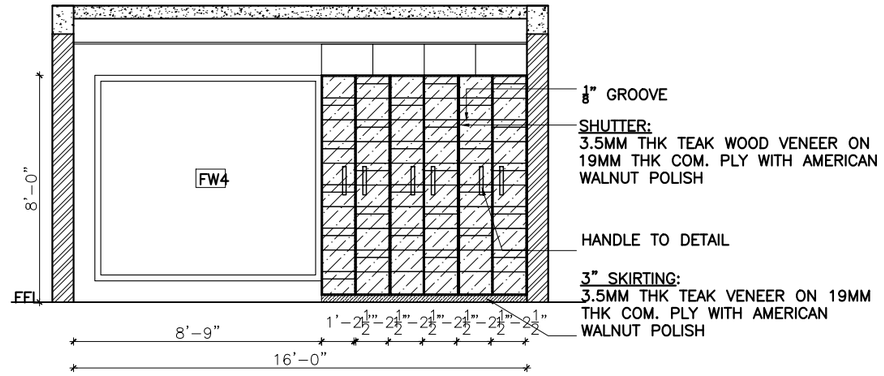

ELEVATION A

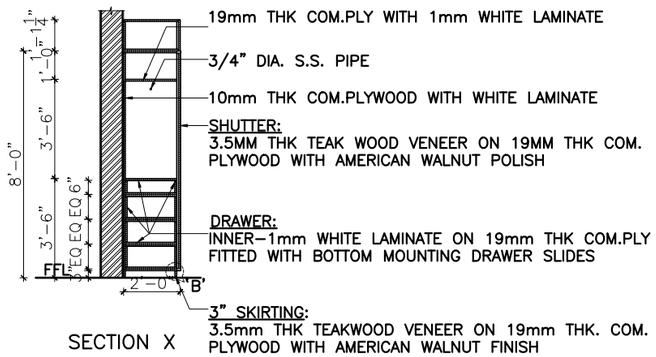

SECTION X

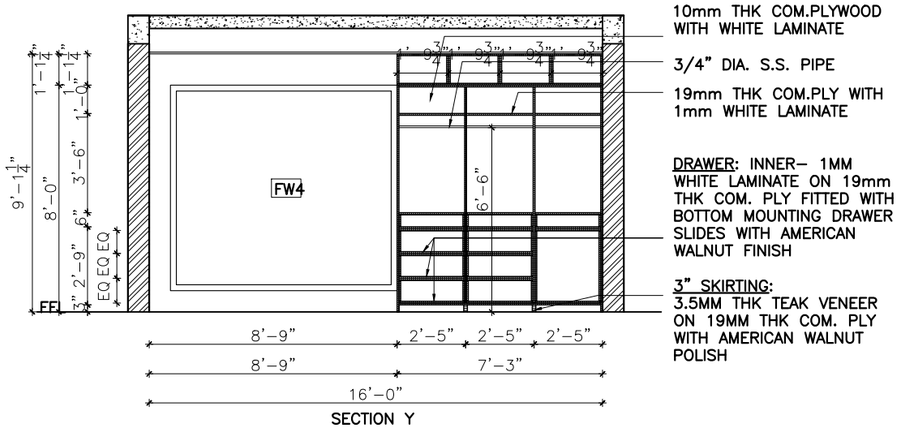

SECTION Y

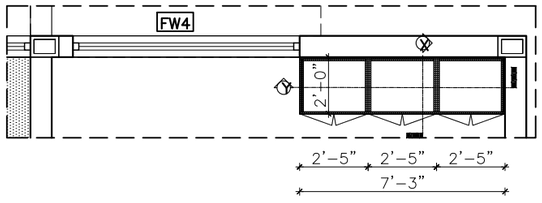

GF BEDROOM 1 – WARDROBE – PART PLAN

3" SKIRTING: 3.5mm THK TEAK WOOD VENEER ON 19mm THK. COM. PLYWOOD WITH AMERICAN WALNUT FINISH

DETAIL–B

This drawing is the property of ARUN AND ASSOCIATES (A&A) and shall not be passed on to any person not authorised by A&A to recieve it. It shall not be copied or modified in full or part without A&A's prior permission. The details furnished in this drawing are for this PROJECT only.

CLIENT:
MRS. KALAISELVI ARULKUMAR

PROJECT NAME:
RESIDENCE AT COIMBATORE

DRAWING TITLE:
G.F. BEDROOM 1 – WARDROBE DETAIL

DATE	DWG NO.	DRAWN BY	
29.09.22	A2:01	DOREEN S	
SCALE	PROJ CODE	CHECKED BY	
1"=6'0"	RES–338–2018	ARUN P.	N

ARUN AND ASSOCIATES
ARCHITECTS & PLANNERS
1289, TRICHY ROAD,
COIMBATORE – 641 018.

PRACTICAL TRAINING

JUNE 2022 - NOVEMBER 2022

DR. V.A. RAGHUPATHI

RESIDENCE AT TIRUCHENGODE

NAME : DOREEN GRACE SANTHOSH

REG NO : 39210021

ARUN & ASSOCIATES

1289,TRICHY ROAD,COIMBATORE-640018.

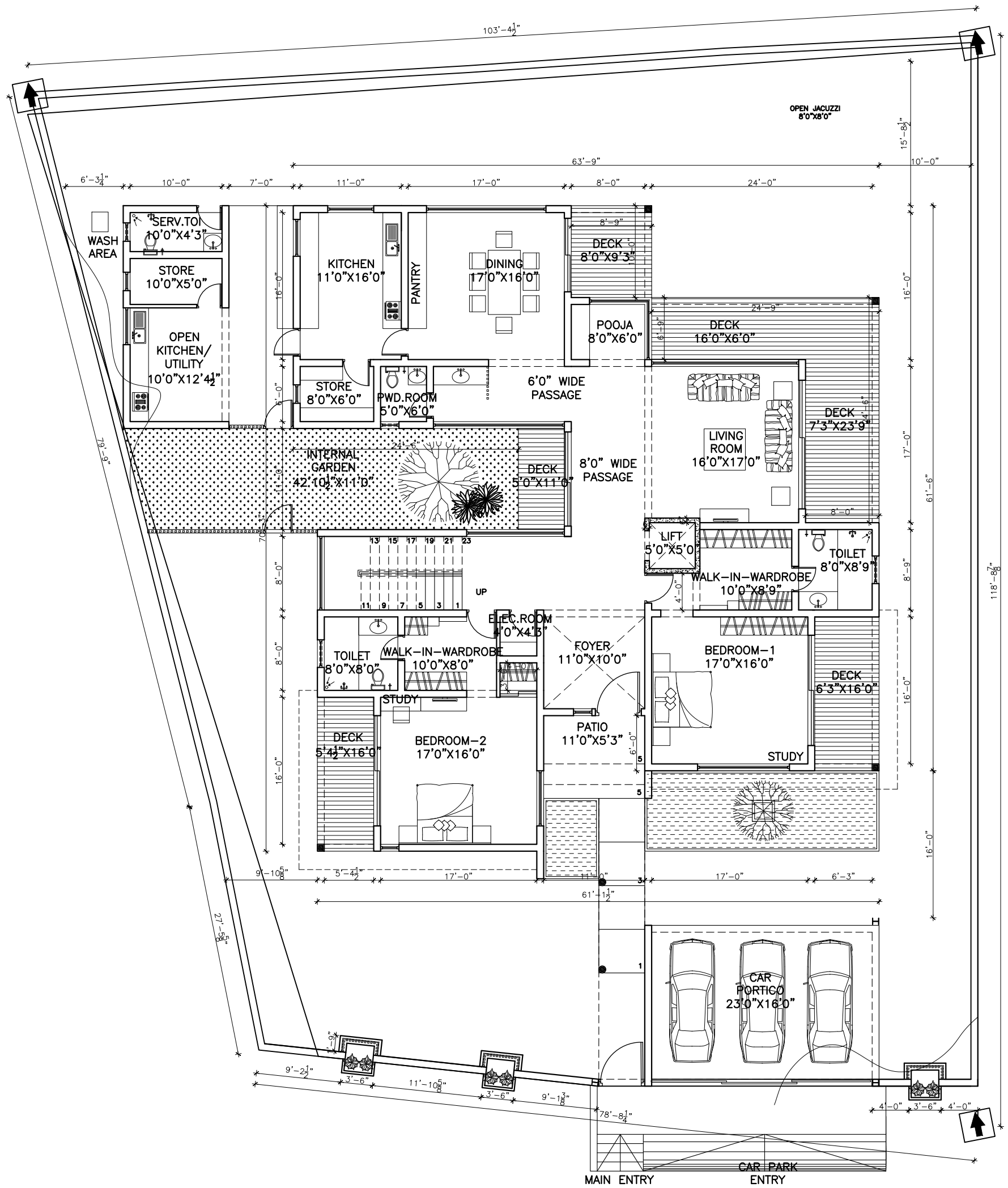

FOR REFERENCE ONLY

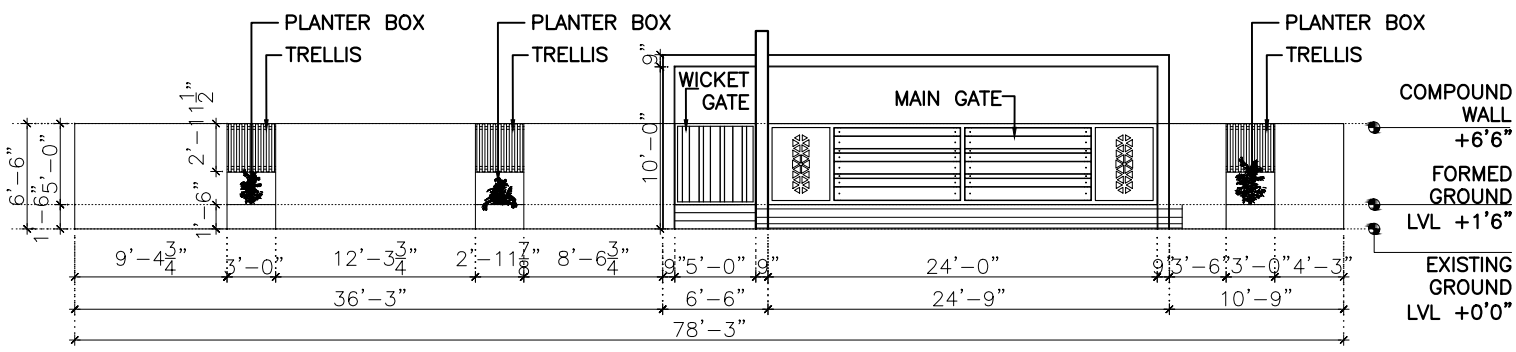

CLIENT:
DR.V.A.RAGHUPATHI
PROJECT NAME:
PROPOSED RESIDENCE AT TIRUCHENGODE
DRAWING TITLE:
SCHEME-FIRST FLOOR PLAN(OPT-2)

DATE	DWG NO.	DRAWN BY	N
02.06.22		PRADHIKSHA	
SCALE	PROJ CODE	CHECKED BY	
N.T.S	RES-493-2022	ARUN P.	

AREA DETAILS:

GROUND FLOOR	:	3495.00 SQ.FT
INT.GARDEN DECK	:	55.00 SQ.FT
CAR PARKING	:	430.00 SQ.FT
GROUND FLOOR AREA AREA(INC.CAR-PARK&DECK)	:	3980.00 SQ.FT
FIRST FLOOR	:	3495.00 SQ.FT
DOUBLE-HEIGHT(FOYER)	:	110.00 SQ.FT
FIRST FLOOR AREA (EXC.DOUBLE-HEIGHT)	:	3385.00 SQ.FT
TOTAL AREA	:	7360.00 SQ.FT

SERVANT QUARTERS	:	275.00 SQ.FT
TOTAL BUILT-UP AREA	:	7635.00 SQ.FT
GROUND FLOOR DECK	:	670.00 SQ.FT
FIRST FLOOR DECK	:	330.00 SQ.FT

This drawing is the property of ARUN AND ASSOCIATES (A&A) and shall not be passed on to any person not authorised by A&A to recieve it. It shall not be copied or modified in full or part without A&A's prior permission. The details furnished in this drawing are for this PROJECT only.

ARUN AND ASSOCIATES
ARCHITECTS & PLANNERS
1289, TRICHY ROAD,
COIMBATORE - 641 018.

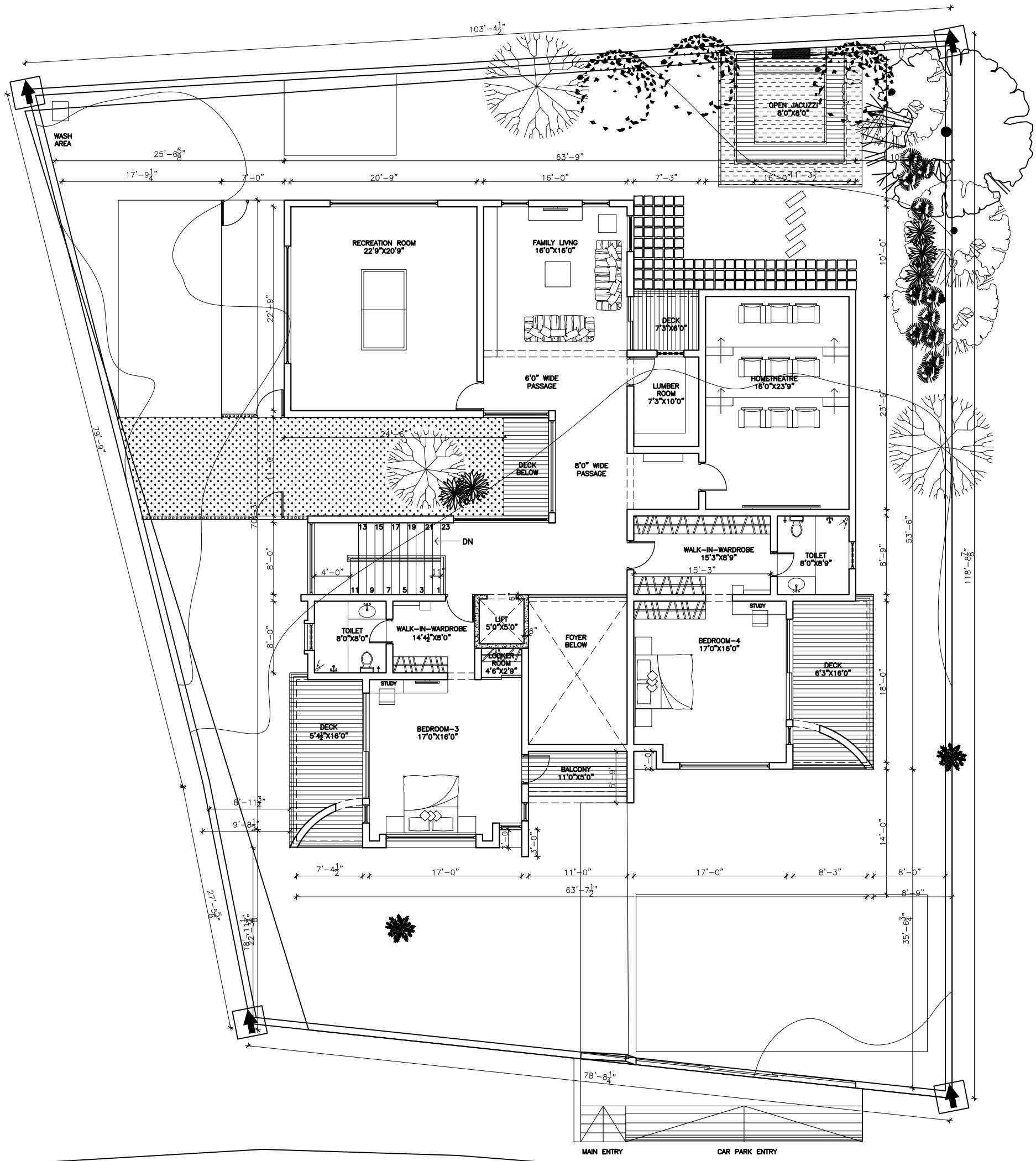

FOR REFERENCE ONLY

CLIENT:
DR.V.A.RAGHUPATHI

PROJECT NAME:
PROPOSED RESIDENCE AT TIRUCHENGODE

DRAWING TITLE:
FIRST FLOOR PLAN

DATE	DWG NO.	DRAWN BY	N
04.08.22		PRADHIKSHA	
SCALE	PROJ CODE	CHECKED BY	
N.T.S	RES-493-2022	ARUN P.	

AREA DETAILS:

GROUND FLOOR	:	3495.00 SQ.FT
INT.GARDEN DECK	:	55.00 SQ.FT
CAR PARKING	:	430.00 SQ.FT
GROUND FLOOR AREA AREA(INC.CAR-PARK&DECK)	:	3980.00 SQ.FT
FIRST FLOOR	:	3495.00 SQ.FT
DOUBLE-HEIGHT(FOYER)	:	110.00 SQ.FT
FIRST FLOOR AREA (EXC.DOUBLE-HEIGHT)	:	3385.00 SQ.FT
TOTAL AREA	:	7360.00 SQ.FT

SERVANT QUARTERS	:	275.00 SQ.FT
TOTAL BUILT-UP AREA	:	7635.00 SQ.FT
GROUND FLOOR DECK	:	670.00 SQ.FT
FIRST FLOOR DECK	:	330.00 SQ.FT
NO OF STEPS	:	23
THREAD WIDTH	:	11"
THREAD LENGTH	:	4'
RISER HEIGHT	:	6"

This drawing is the property of ARUN AND ASSOCIATES (A&A) and shall not be passed on to any person not authorised by A&A to recieve it. It shall not be copied or modified in full or part without A&A's prior permission. The details furnished in this drawing are for this PROJECT only.

ARUN AND ASSOCIATES
ARCHITECTS & PLANNERS
1289, TRICHY ROAD,
COIMBATORE - 641 018.

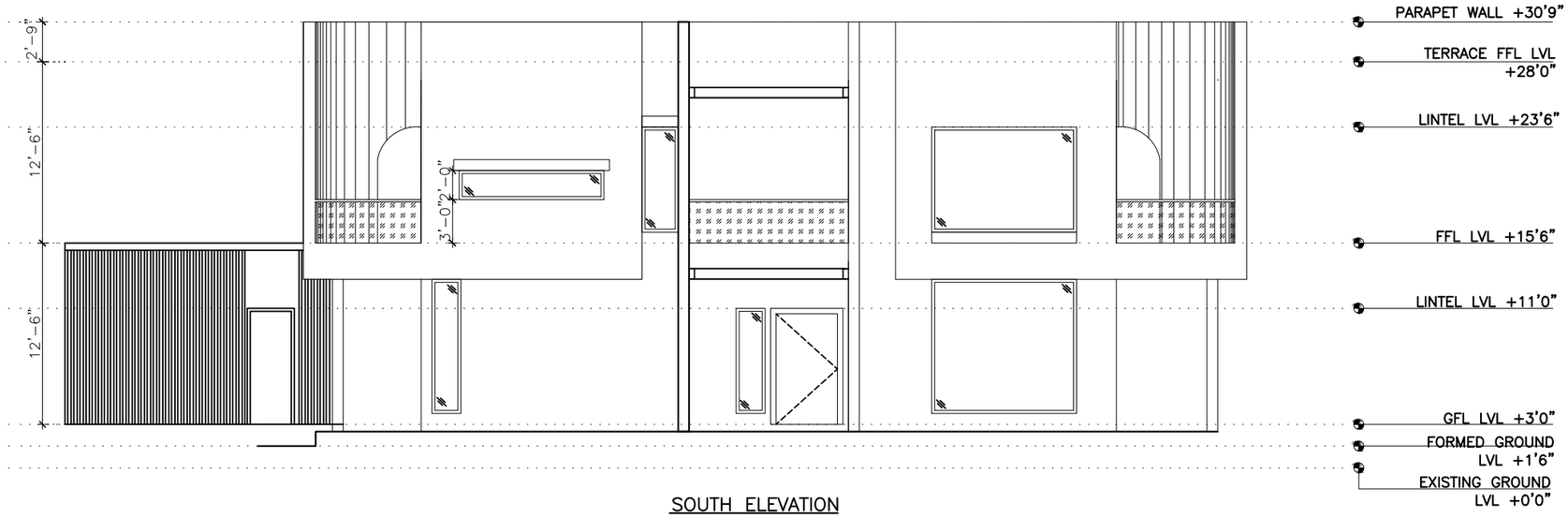

SOUTH ELEVATION

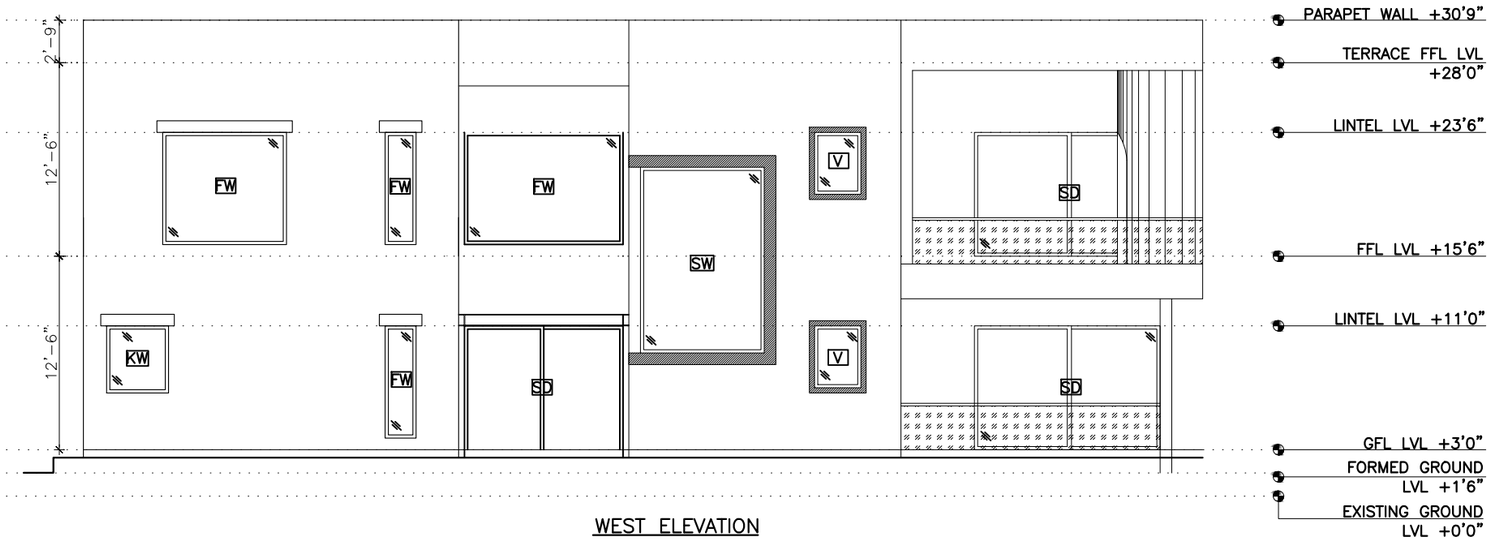

WEST ELEVATION

This drawing is the property of ARUN AND ASSOCIATES (A&A) and shall not be passed on to any person not authorised by A&A to recieve it. It shall not be copied or modified in full or part without A&A's prior permission. The details furnished in this drawing are for this PROJECT only.

CLIENT:
DR.V.A.RAGHUPATHI

PROJECT NAME:
PROPOSED RESIDENCE AT TIRUCHENGODE

DRAWING TITLE:
ELEVATION

DATE	DWG NO.	DRAWN BY	N
02.11.22	A2:01	DOREEN S.	
SCALE	PROJ CODE	CHECKED BY	
1"=6'0"	RES-338-2018	ARUN P.	

ARUN AND ASSOCIATES
ARCHITECTS & PLANNERS
1289, TRICHY ROAD,
COIMBATORE - 641 018.

PROPOSED RESIDENCE AT TIRUCHENGODE

RESIDENCE FOR DR.V.A. RAGHUPATHI
3D MODEL

ARUN & ASSOCIATES
1289, TRICHY ROAD, COIMBATORE-640018.

N

PRACTICAL TRAINING

JUNE 2022 - NOVEMBER 2022

MRS. VIJAYALAKSHMI

RESIDENCE AT COIMBATORE

NAME : DOREEN GRACE SANTHOSH

REG NO : 39210021

ARUN & ASSOCIATES

1289, TRICHY ROAD, COIMBATORE-640018.

This drawing is the property of ARUN AND ASSOCIATES (A&A) and shall not be passed on to any person not authorised by A&A to recieve it. It shall not be copied or modified in full or part without A&A's prior permission. The details furnished in this drawing are for this PROJECT only.

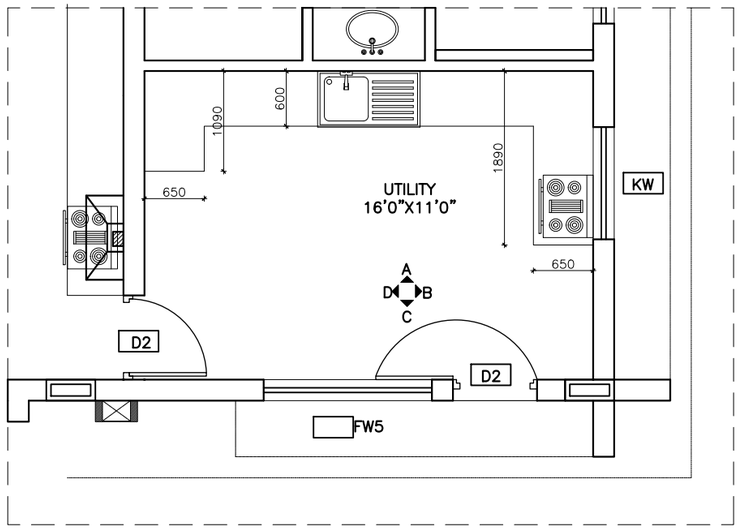

UTILITY PART PLAN

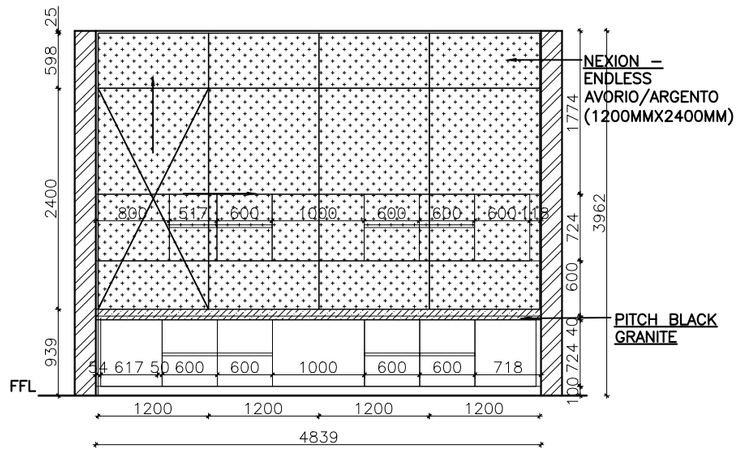

ELEVATION A (NORTH ELEVATION)

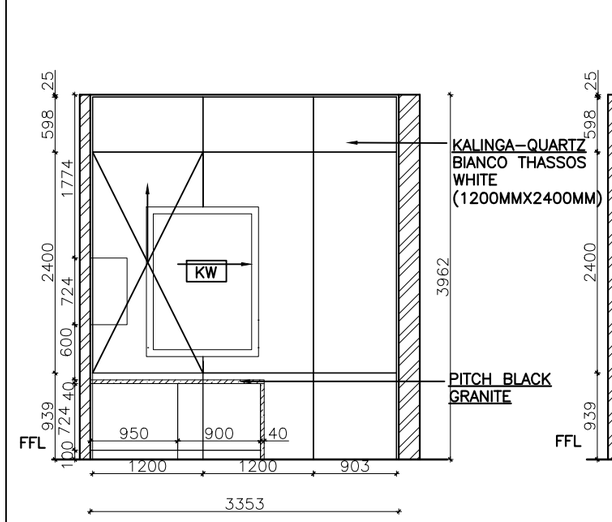

ELEVATION B (EAST ELEVATION)

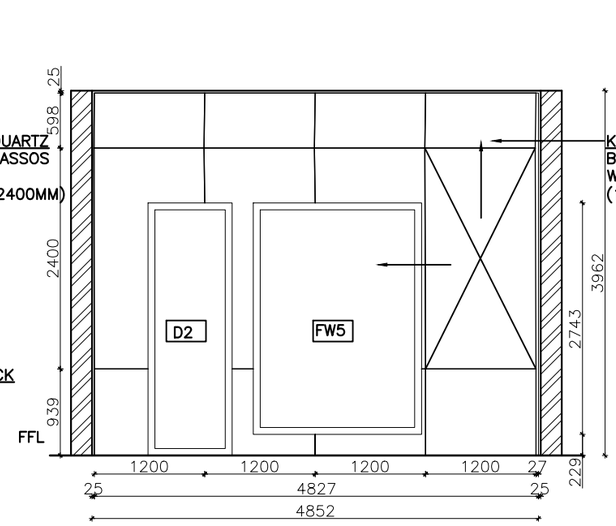

ELEVATION C (SOUTH ELEVATION)

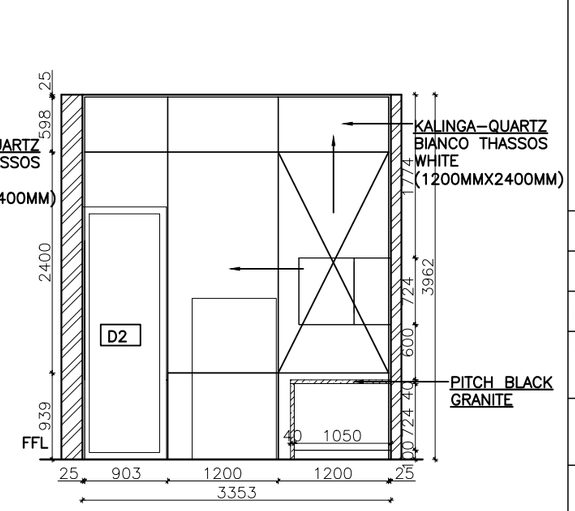

ELEVATION D (WEST ELEVATION)

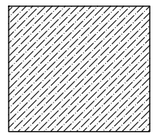

UTILITY COUNTERTOP
PITCH BLACK GRANITE

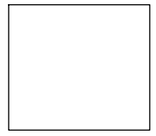

KALINGA–QUARTZ
BIANCO THASSOS WHITE
(1200MMX2400MM)

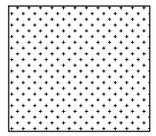

NEXION ENDLESS
AVORIO/ ARGENTO
(1200MMX2400MM)
MATT FINISH

NO.	DESCRIPTION	CHECKED	DATE

CLIENT:
MRS.VIJAYALAKSHMI

PROJECT NAME:
RESIDENCE AT COIMBATORE

DRAWING TITLE:
UTILITY TILE DETAIL

DATE	DWG NO.	DRAWN BY	
31.10.22	A2:01	KARUNESH	N
SCALE	PROJ CODE	CHECKED BY	
1"=8'0"	RES–341–2018	ARUN P.	

ARUN AND ASSOCIATES
ARCHITECTS & PLANNERS
1289, TRICHY ROAD,
COIMBATORE – 641 018.

PRACTICAL TRAINING

JUNE 2022 - NOVEMBER 2022

MS. AISHWARYA SOUNDARAJAN

RECREATIONAL SPACE, CAR PORTICO AND GAZEBO FOR RESIDENCE AT COIMBATORE

NAME : DOREEN GRACE SANTHOSH

REG NO : 39210021

ARUN & ASSOCIATES

1289,TRICHY ROAD,COIMBATORE-640018.

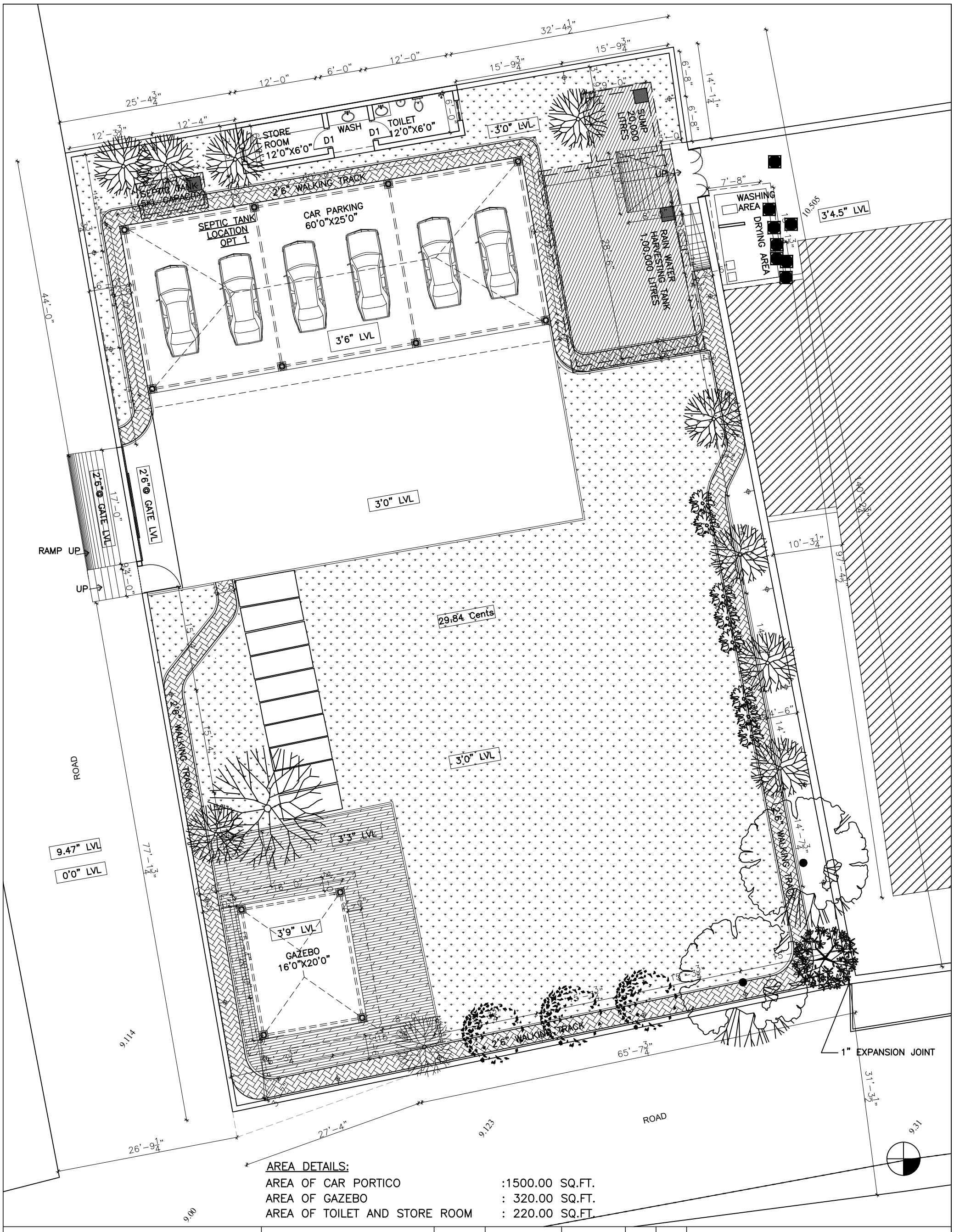

AREA DETAILS:

AREA OF CAR PORTICO	:1500.00 SQ.FT.
AREA OF GAZEBO	: 320.00 SQ.FT.
AREA OF TOILET AND STORE ROOM	: 220.00 SQ.FT.

This drawing is the property of ARUN AND ASSOCIATES (A&A) and shall not be passed on to any person not authorised by A&A to recieve it. It shall not be copied or modified in full or part without A&A's prior permission. The details furnished in this drawing are for this PROJECT only.

CLIENT: ISHWARYA SOUNDARAJAN	DATE 18-08-22	DWG NO. A2:01	DRAWN BY DOREEN S.	N
PROJECT NAME: RESIDENCE				
DRAWING TITLE: SITE PLAN – OPTION 1	SCALE 1"=12'0"	PROJ CODE	CHECKED BY ARUN P.	

ARUN AND ASSOCIATES
ARCHITECTS & PLANNERS
1289, TRICHY ROAD,
COIMBATORE – 641 018.

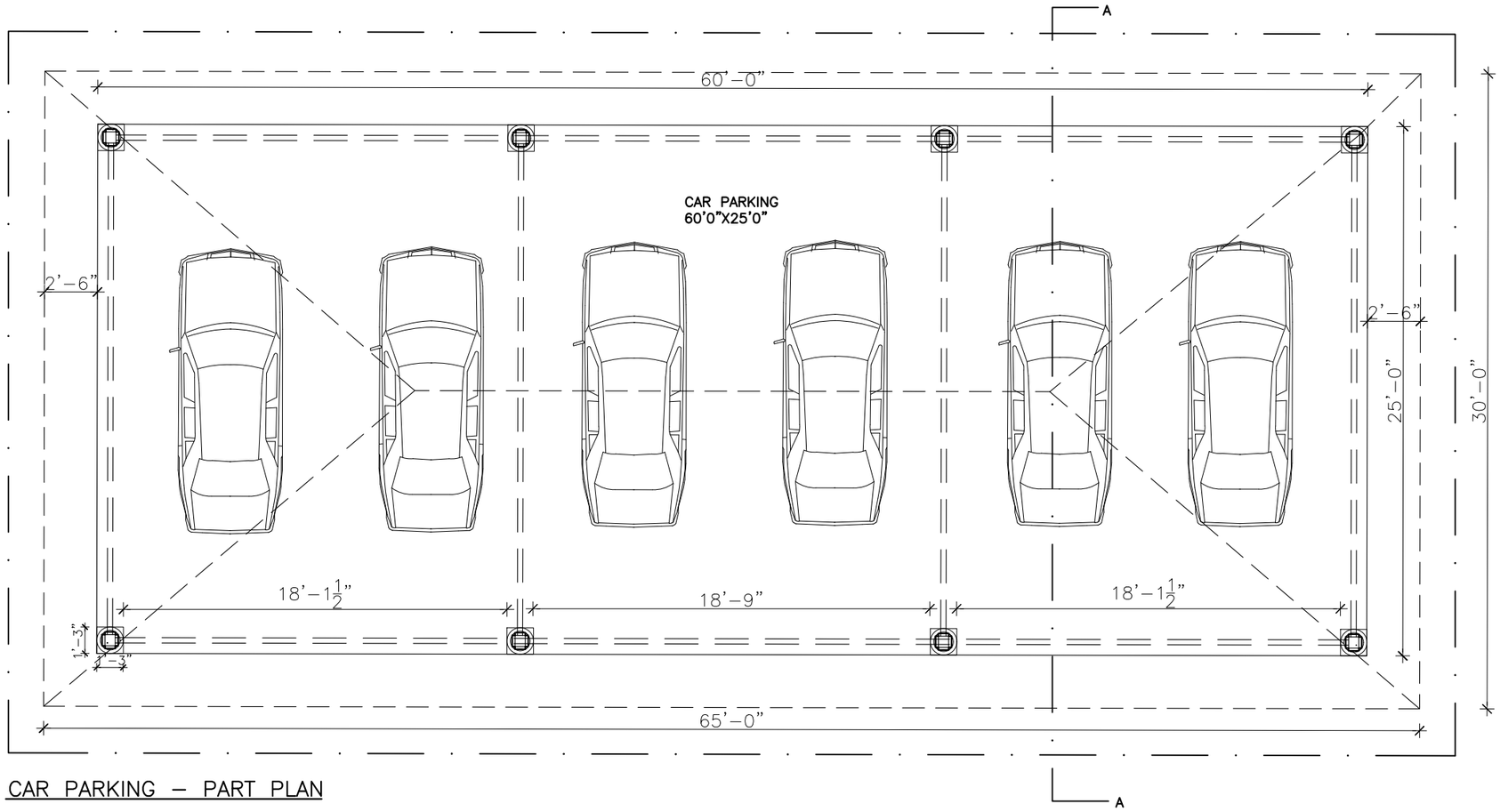

CAR PARKING – PART PLAN

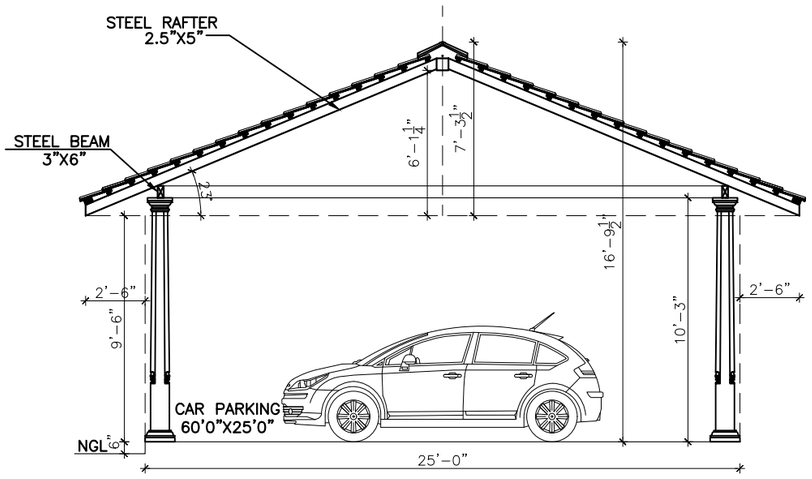

SECTION–A

This drawing is the property of ARUN AND ASSOCIATES (A&A) and shall not be passed on to any person not authorised by A&A to receive it. It shall not be copied or modified in full or part without A&A's prior permission. The details furnished in this drawing are for this PROJECT only.

FOR REFERENCE ONLY

REVISIONS:

NO.	DESCRIPTION	CHECKED	DATE
1.			

CLIENT:
ISHWARYA SOUNDARAJAN

PROJECT NAME:
RESIDENCE

DRAWING TITLE:
CAR PORTICO – SECTION

DATE	DWG NO.	DRAWN BY	N
04–07–22	A2:01	DOREEN S.	
SCALE	PROJ CODE	CHECKED BY	
1"=8'0"		ARUN P.	

ARUN AND ASSOCIATES
ARCHITECTS & PLANNERS
1289, TRICHY ROAD,
COIMBATORE – 641 018.

PROPOSED RECREATIONAL SPACE AND GAZEBO

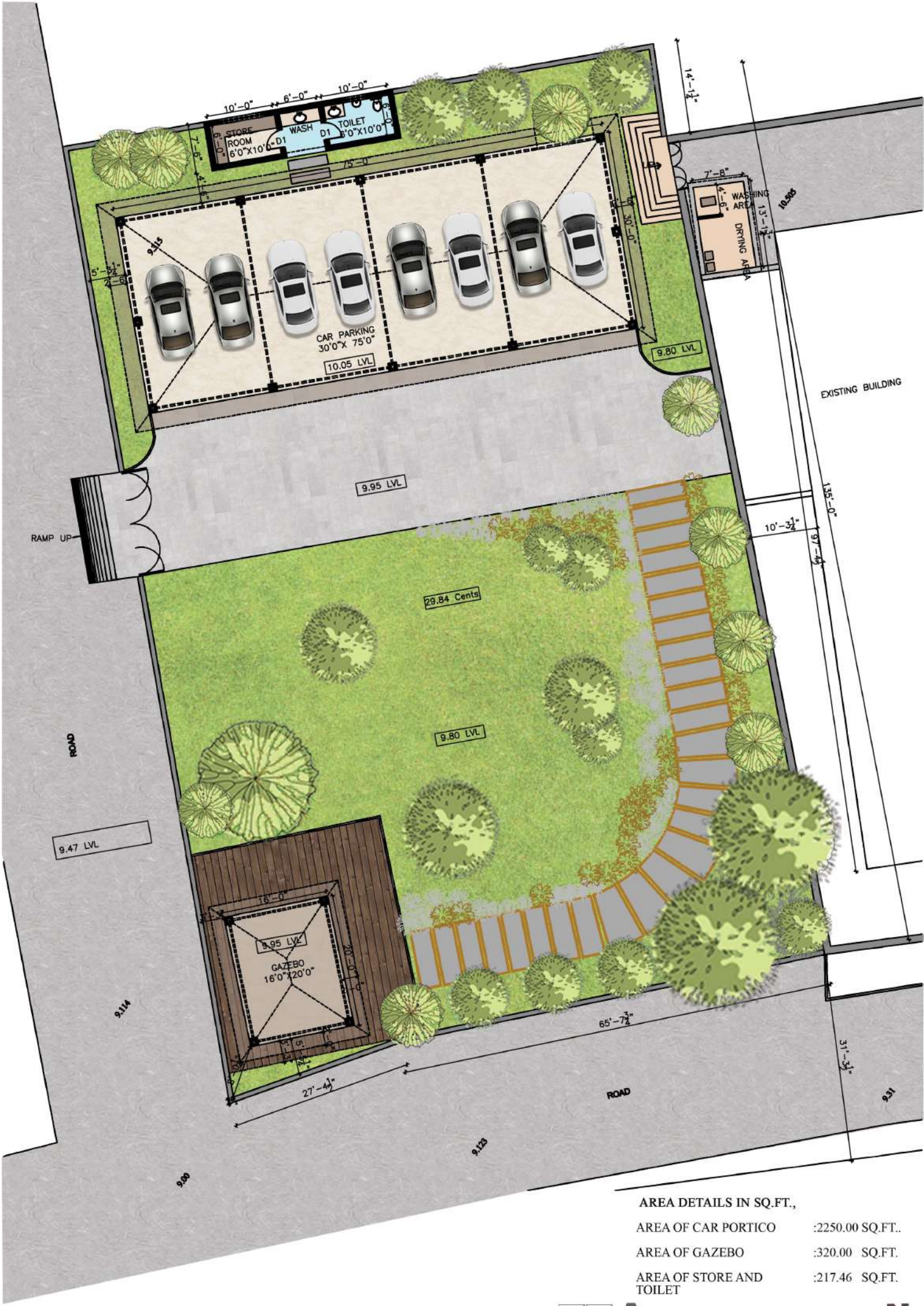

AREA DETAILS IN SQ.FT.,

AREA OF CAR PORTICO	:2250.00 SQ.FT..
AREA OF GAZEBO	:320.00 SQ.FT.
AREA OF STORE AND TOILET	:217.46 SQ.FT.

PROPOSAL FOR MS.AISHWARYA
OPTION 1

ARUN & ASSOCIATES
1289, TRICHY ROAD, COIMBATORE-640018.

N

PROPOSED RECREATIONAL SPACE AND GAZEBO

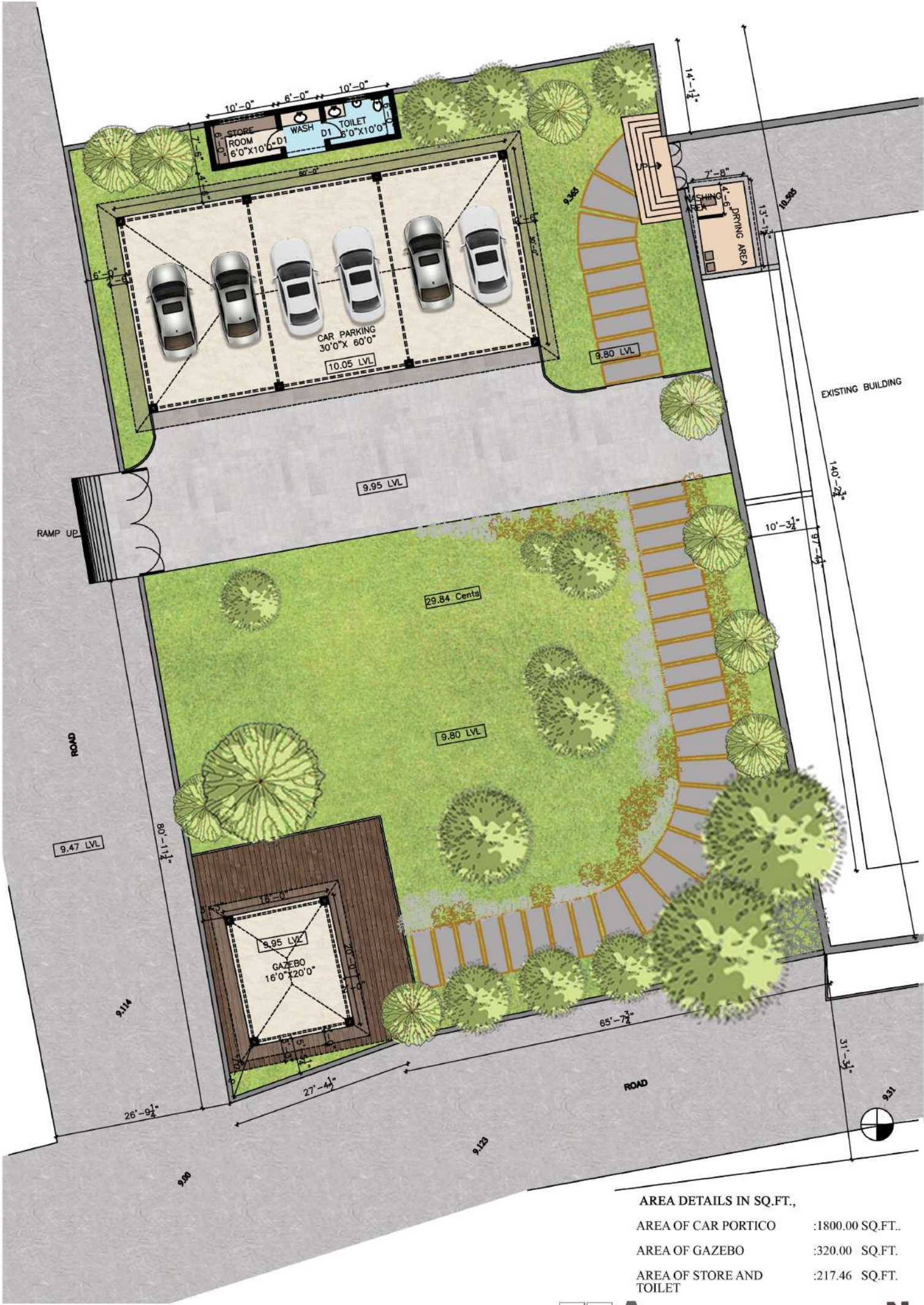

AREA DETAILS IN SQ.FT.,

AREA OF CAR PORTICO	:1800.00 SQ.FT..
AREA OF GAZEBO	:320.00 SQ.FT.
AREA OF STORE AND TOILET	:217.46 SQ.FT.

PROPOSAL FOR MS.AISHWARYA

OPTION 2

ARUN & ASSOCIATES
1289, TRICHY ROAD, COIMBATORE-640018.

N

PRACTICAL TRAINING

JUNE 2022 - NOVEMBER 2022

MR. ELANGOVAN

RESIDENCE RENOVATION AT TIRUPUR

NAME : DOREEN GRACE SANTHOSH

REG NO : 39210021

ARUN & ASSOCIATES

1289,TRICHY ROAD,COIMBATORE-640018.

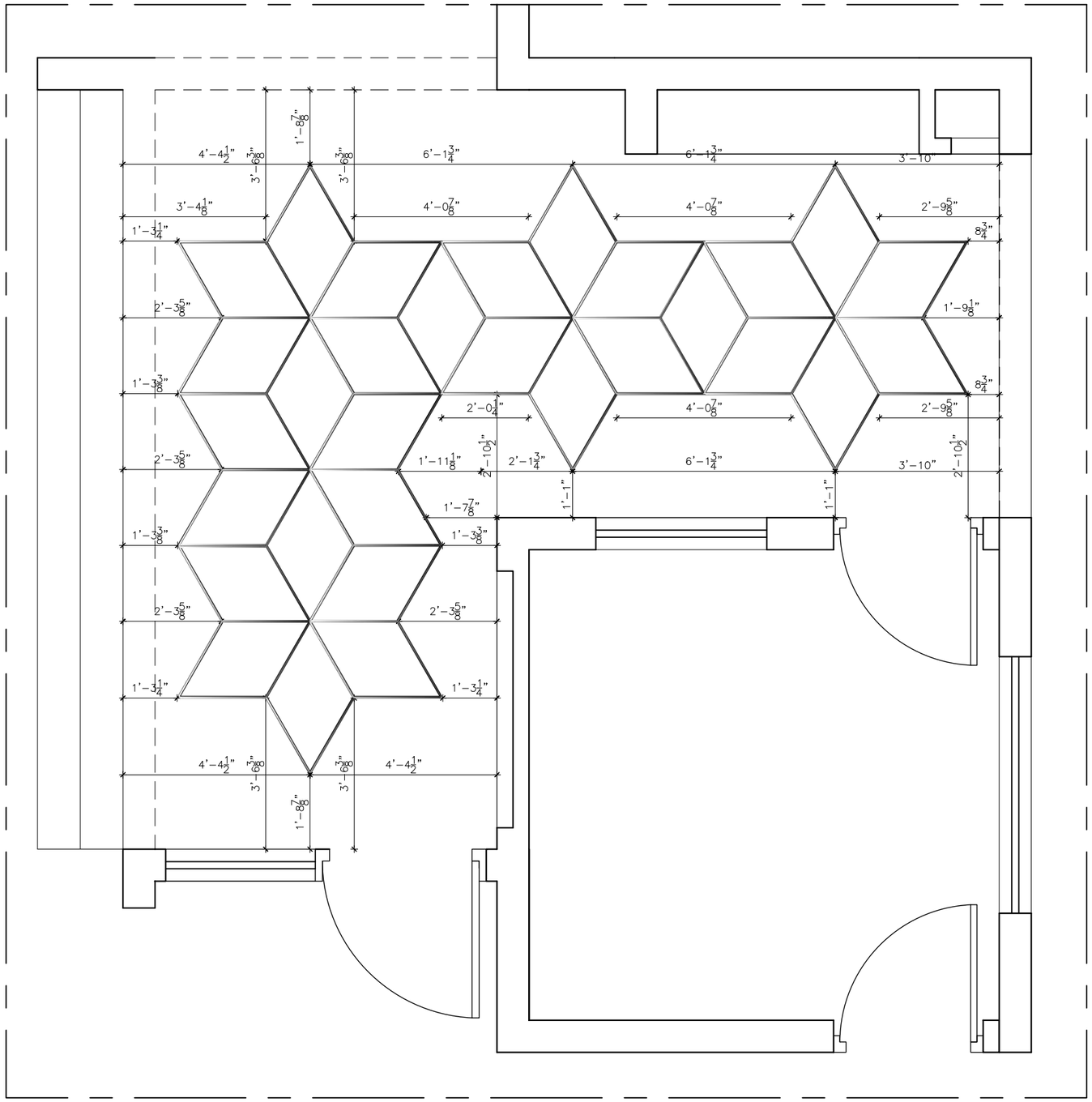

1/2 INCH S.S STRIPS

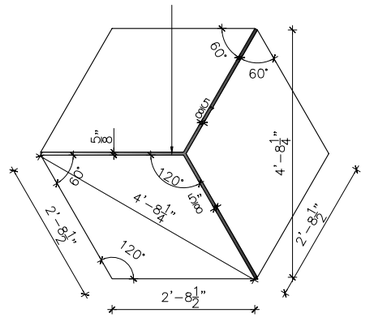

2'0" LEAF SIZE

REVISIONS:			
2.	REVISION 2	P.ARUN	16.02.22
1.	REVISION 1	P.ARUN	11.02.22
NO.	DESCRIPTION	CHECKED	DATE

CLIENT:
MR.ELANGOVAN

PROJECT NAME:
RESIDENCE RENVATION AT TIRUPUR

DRAWING TITLE:
FLOORING PATTERN

DATE	DWG NO.	DRAWN BY
8.07.20	A2:01	PRADHIKSHA
SCALE	PROJ CODE	CHECKED BY
1"=2'0"		ARUN P.

N

ARUN AND ASSOCIATES
ARCHITECTS & PLANNERS
1289, TRICHY ROAD,
COIMBATORE – 641 018.

PROPOSED RESIDENCE AT COIMBATORE

MRS VIJAYALAKSHMI

FLOORING TILE - 3D MODEL

ARUN & ASSOCIATES

1289, TRICHY ROAD, COIMBATORE-641018.

PRACTICAL TRAINING

JUNE 2022 - NOVEMBER 2022

MR. DHALAPATHI

RESIDENCE AT TIRUPUR

NAME : DOREEN GRACE SANTHOSH

REG NO : 39210021

ARUN & ASSOCIATES

1289,TRICHY ROAD,COIMBATORE-640018.

PROPOSED RESIDENCE AT TIRUPUR

AREA DETAILS IN SQ.FT.,

AREA OF GROUND FLOOR	:3199.50.
AREA OF FIRST FLOOR (EXCLUDING DOUBLE HEIGHT)	:2531.31.
TOTAL BUILT UP AREA OF RESIDENCE	:5730.81.
AREA OF CAR PARKING	:551.25.
AREA OF ANCILLARY BUILDING	:389.50.
TOTAL BUILT UP AREA	:6671.56.

RESIDENCE FOR MR.DHALAPATHI
SITE PLAN

ARUN & ASSOCIATES
1289, TRICHY ROAD, COIMBATORE-640018.

N

PROPOSED RESIDENCE AT TIRUPUR

AREA DETAILS IN SQ.FT.,

AREA OF GROUND FLOOR	:3199.50SQ.FT.
AREA OF FIRST FLOOR (EXCLUDING DOUBLE HEIGHT)	:2531.31SQ.FT.
TOTAL BUILT UP AREA OF RESIDENCE	:5730.81SQ.FT.
AREA OF CAR PARKING	:551.25SQ.FT.
AREA OF ANCILLARY BUILDING	:389.50SQ.FT.
TOTAL BUILT UP AREA	:6671.56SQ.FT.

ARUN & ASSOCIATES
1289, TRICHY ROAD, COIMBATORE-640018.

N

RESIDENCE FOR MR.DHALAPATHI
GROUND FLOOR PLAN

PROPOSED RESIDENCE AT TIRUPUR

AREA DETAILS IN SQ.FT.,

AREA OF GROUND FLOOR	:3199.50SQ.FT.
AREA OF FIRST FLOOR (EXCLUDING DOUBLE HEIGHT)	:2531.31SQ.FT.
TOTAL BUILT UP AREA OF RESIDENCE	:5730.81SQ.FT.
AREA OF CAR PARKING	:551.25SQ.FT.
AREA OF ANCILLARY BUILDING	:389.50SQ.FT.
TOTAL BUILT UP AREA	:6671.56SQ.FT.

ARUN & ASSOCIATES
1289, TRICHY ROAD, COIMBATORE-640018.

N

RESIDENCE FOR MR.DHALAPATHI
FIRST FLOOR PLAN

PRACTICAL TRAINING

JUNE 2022 - NOVEMBER 2022

SITE VISIT DOCUMENTATION

BRINDA HOUSE - COMPLETED PROJECT

RESIDENCE AT COIMBATORE

NAME : DOREEN GRACE SANTHOSH

REG NO : 39210021

ARUN & ASSOCIATES

1289,TRICHY ROAD,COIMBATORE-640018.

BRINDA HOUSE AT COIMBATORE

FORMAL LIVING

THE FORMAL LIVING AND DINING OPENS TO THE COURTYARD VIA SLIDING DOORS TO ACCOMODATE PEOPLE DURING FUNCTIONS

DINING

COURTYARD

STATUARIO MARBLE FLOORING

FAMILY LIVING

ALUMIINUM FRAME

RIVERBED FINISHED GRANITE

DOUBLE HEIGHT DINING

ROOF CUTOUT TO HARNESS LIGHT INTO THE BUILDING THROUGH A MINIMALIST DESIGN

GYPSUM BOARD FALSE CEILING

STUDY AREA

POOJA WALL

FAMILY LIVING BEHIND

CERA GREY GRANITE SONES

CANTILEVER STAIRS WITH WHITE ASH WOOD

POOJA AREA

TEXTURED WALL

POOJA WALL FACING THE EAST AS PER VASTU. THE MORNING SUNLIGHT FALLS ON THE WALL CREATING A DIVINE ATMOSPHERE

DAUGHTER'S BEDROOM

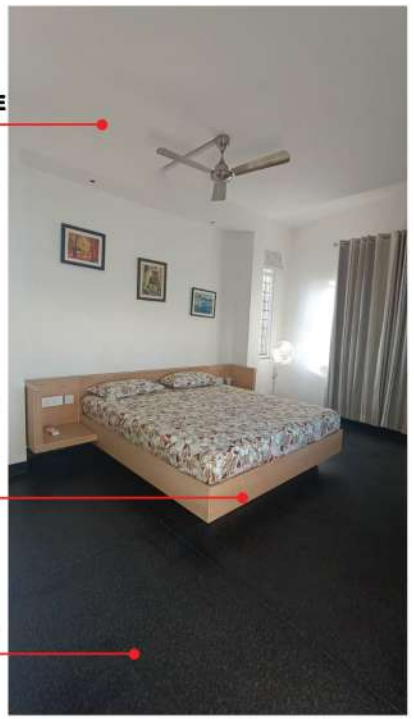

GYPSUM BOARD FALSE CEILING

WOOD - WHITE ASH

RIVERBED FINISHED GRANITE

DOREEN GRACE SANTHOSH

BRINDA HOUSE AT COIMBATORE

SON'S BEDROOM

GYPSUM BOARD FALSE CEILING

WOODEN PANELLING

WARDROBE BEHIND

RIVERBED FINISHED GRANITE

WOOD - WHITE ASH

S.S. STEEL GRILL

STUDY AREA

DAUGHTER'S BEDROOM

RIVERBED FINISHED GRANITE

CORRIDOR

DOUBLE HEIGHT GYPSUM BOARD FALSE CEILING

BUFFER SPACE TO HOME THEATER AND TERRACE

SONS'S BEDROOM

WHITE ASH WOOD

KITCHEN

MASTER BEDROM

COURTYARD

STAIRCASE

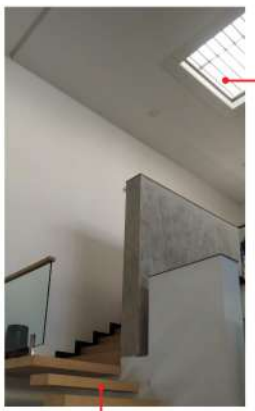

ROOF CUTOUT ABOVE POOJA ROOM. THE LIGHT FROM SKYLIGHT AND COURTYARD GIVES THE POOJA AREA A DIVINE FEEL

CANTILEVER STAIRS WITH WHITE ASH WOOD

RIVERBED FINISHED GRANITE

LAMINATED GLASS IN RAILING

EXTERIOR

ROUGH TEXTURED WALL DONE MANUALLY BY FIRST APPLYING A COAT OF POWDERED CEMENT TO PREVENT CRACKS

WALLS ARE OBLIQUE AND BENT IN 2 DIRECTIONS AND THIS IS CARRIED OUT USING CONCRETE SHEAR WALLS

RIVERBED FINISHED GRANITE

DOREEN GRACE SANTHOSH

PRACTICAL TRAINING

JUNE 2022 - NOVEMBER 2022

SITE VISIT DOCUMENTATION

MRS. VIJAYALAKSHMI - ONGOING PROJECT

RESIDENCE AT COIMBATORE

NAME : DOREEN GRACE SANTHOSH

REG NO : 39210021

ARUN & ASSOCIATES

1289,TRICHY ROAD,COIMBATORE-640018.

VIJAYALAKSHMI- RESIDENCE AT COIMBATORE

TOILET

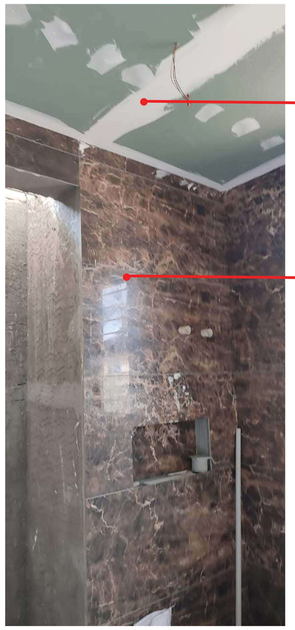

COURTYARD

THIS COURTYARD IS ONLY ACCESSIBLE FROM T THE OFFICE AND ALSO SERVES AS A WAITING A AREA FOR THOSE WHO COME TO THE OFFICE. IT IS NOT ACCESSIBLE FROM THE HOUSE.

REAR SIDE

ROOF CUTOUT

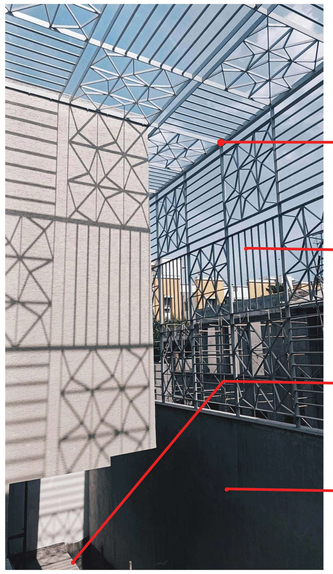

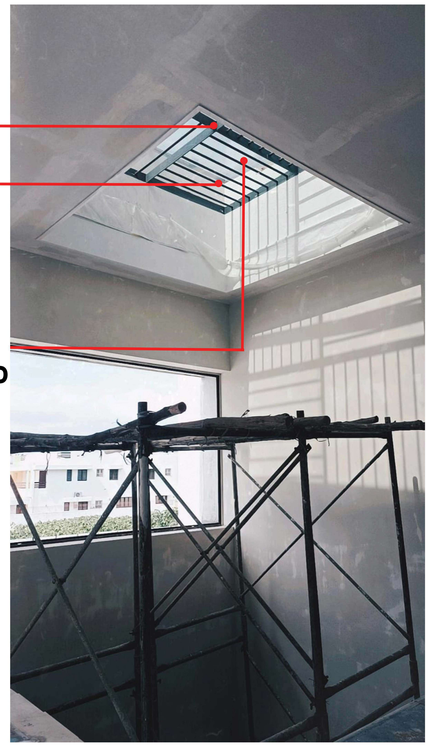

DOREEN GRACE SANTHOSH

VIJAYALAKSHMI- RESIDENCE AT COIMBATORE

TERRACE

ROOF CUT OUT COVERED WITH TOUGHENED GLASS AND M.S. STEEL

ROUGH TEXTURED WALL

WINDOW JOINERY

WOODEN FRAME WINDOW

STAINLESS STEEL GRILL

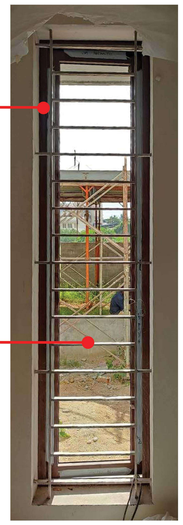

EXTERIOR

ANGULAR WALL WITH ROUGH TEXTURED FINSH PREVENTS CRACKS IN WALL PAINT

ENTRANCE

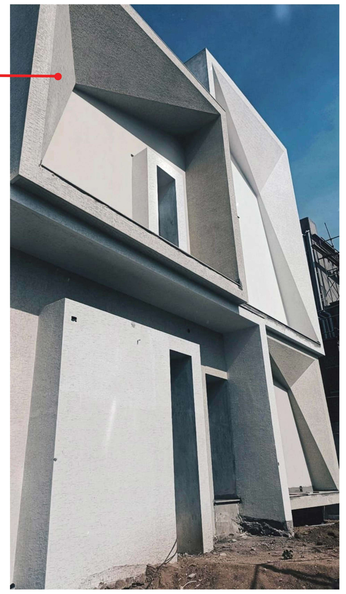

LIVING ROOM

FALSE CEILING

GYPSUM BOARD FALSE CEILING

VENEER FALSE CEILING FOR CHANDLIER

VIEW TO COURTYARD

BEDROOM

DRESSER ROOM

VENEER FALSE CEILING WITH TRAP DOOR FOR A/C UNIT IN DRESSER ROOMS

DOREEN GRACE SANTHOSH

PRACTICAL TRAINING

JUNE 2022 - NOVEMBER 2022

3 D MODEL

SAGS APPARELS

FACTORY AT TIRUPUR

NAME : DOREEN GRACE SANTHOSH

REG NO : 39210021

ARUN & ASSOCIATES

1289,TRICHY ROAD,COIMBATORE-640018.

PROPOSED FACTORY AT TIRUPUR

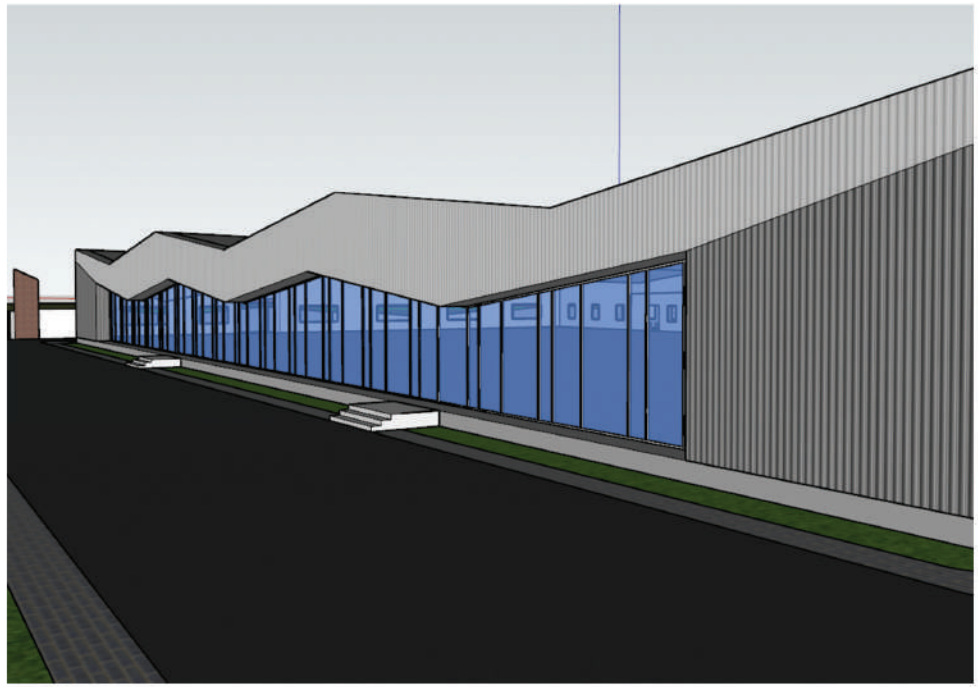

SAGS APPARELS - 3D MODEL

ARUN & ASSOCIATES
1289, TRICHY ROAD, COIMBATORE-641018.