CROP PROTECTION SYSTEM USING ARDUINO

A Project Report Phase - II

Submitted in partial fulfillment of the requirements for the award of

Bachelor of Engineering degree in Electronics and Communication Engineering

By

SHAIK SABEER (39130383)

RAVI SANKARA NARAYANA (39130399)

DEPARTMENT OF ELECTRONICS AND COMMUNICATION ENGINEERING

SCHOOL OF ELECTRICAL AND ELECTRONICS

SATHYABAMA

INSTITUTE OF SCIENCE AND TECHNOLOGY

(DEEMED TO BE UNIVERSITY)

Accredited with Grade "A" by NAAC

JEPPIAAR NAGAR, RAJIV GANDHI SALAI

CHENNAI - 600 119

APRIL - 2023

SATHYABAMA

INSTITUTE OF SCIENCE AND TECHNOLOGY
(DEEMED TO BE UNIVERSITY)
Accredited with "A" grade by NAAC
Jeppiaar Nagar, Rajiv Gandhi Salai, Chennai – 600 119
www.sathyabama.ac.in

DEPARTMENT OF ELECTRONICS AND COMMUNICATION ENGINEERING

BONAFIDE CERTIFICATE

This is to certify that this Final Year Project Report is bonafide work of SHAIK SABEER (REG NO: 39130383) and RAVI SANKARA NARAYANA (REG NO: 39130399) who carried out the project entitled "CROP PROTECTION SYSTEM USING ARDUINO" under my supervision from Jan 2023 to April 2023.

Internal Guide
Dr. L. MEGALAN LEO M.E., Ph.D.

15/4/2023

Head of the Department
Dr. T. Ravi, M.E., Ph.D.

0**Submitted for Viva Voce Examination held on**_____

V. Vedanarayanan

Internal Examiner **External Examiner**

DECLARATION

We, **SHAIK SABEER (39130383)** and **RAVI SANKARA NARAYANA (39130399)** hereby declare that the Project Report entitled **"CROP PROTECTION SYSTEM USING ARDUINO"** done by us under the guidance of **Dr. L. MEGALAN LEO M.E., Ph.D.,** Assistant Professor, Department of Electronics and Communication Engineering, at SATHYABAMA INSTITUTE OF SCIENCE AND TECHNOLOGY, CHENNAI is submitted in partial fulfillment of the requirements for the award of Bachelor of Engineering degree in ELECTRONICS AND COMMUNICATION.

DATE:

PLACE: CHENNAI **SIGNATURE OF THE CANDIDATES**

1.

2.

ACKNOWLEDGEMENT

We are pleased to acknowledge our sincere thanks to the Board of Management of **SATHYABAMA**, Institute of Science and Technology for their kind encouragement in doing this project and for completing it successfully. We are grateful to them.

We convey our thanks to **Dr. N.M. Nandhitha, M.E., Ph.D.** Dean, School of Electrical and Electronics Engineering, and **Dr. T. RAVI, M.E., Ph.D.** Head of the Department, Dept. of Electronics and Communication for providing us with the necessary support and details at the right time during the progressive reviews.

We would like to express our sincere and deep sense of gratitude to our Project Guide **Dr.L.MEGALAN LEO M.E., Ph.D.** Department of Electronics and Communication Engineering, for his valuable guidance in the completion of our project work.

We would also like to extend our gratitude to all the Teaching and Non-teaching staff members of the Department of Electronics and Communication who were helpful in many ways for the completion of the project.

ABSTRACT

Agriculture has always been the primary and most important sector of the Indian economy. Farmers are the backbone of one's country, Farmers cannot take care of their farms 24x7 so when farmer is far away from the field, he cannot take care of his form so this which cause in the production of the yield when the animals like buffaloes or cows and some animals from nearby forest areas may enter the field and destroy it. There are many loopholes in such ideas and so improvising agricultural security has become a major issue these days. Thus, this project focuses on proposing a system that detects intruders, monitors any suspicious activity and then reports to the owner of the field with the PIR sensor and Arduino will be activated and buzzer will sound to get rid of animal entering the field simultaneously LED lights will flash and send message to the farmer within 10 seconds of the detection of the animal. It acts as an adaptable system which is a practicable system to the farmers for ensuring complete safety of their farmlands from any attacks or trespassing activities and additional to it a smoke sensor to identify the smoke produced from the fire and a soil moisture sensor to detect the volumetric water content in the soil. Traditional systems like humanoid scarecrows are used even today in an agricultural field to stop birds and animals from disturbing and feeding on growing crops. There are many loopholes in such ideas and so enhancing agricultural security has become a major issue these days. Thus, this project focuses on proposing a system which detects the intruders, monitors any malicious activity and then reports it to the owner of the system. It acts as an adaptable system which provides a practicable system to the farmers for ensuring complete safety of their farmlands from any attacks or trespassing activities.

TABLE OF CONTENTS

Ch. No	TITLE		Pg. No
	ABSTRACT		v
	LIST OF FIGURES		viii
1	**INTRODUCTION**		1
2	**LITERATURE SURVEY**		
	2.1	Inferences from Literature Survey	7
	2.2	Open Problems in Existing System	11
3	**REQUIREMENTS ANALYSIS**		
	3.1	Feasibility Studies/Risk Analysis of the Project	12
	3.2	Hardware and Software Requirements Specification Document	14
	3.3	System Use case	32
4	**DESCRIPTION OF THE PROPOSED SYSTEM**		
	4.1	Aim	33
	4.2	Existing Systems and Methods	33
	4.3	Selected Methodology or process model	35
	4.4	Architecture / Overall Design of Proposed System	38
	4.5	Description of Software for Implementation and Testing plan of the Proposed Model/System	39
	4.6	Project Management Plan	40
	4.7	Financial report on estimated costing	40
	4.8	Transition/ Software to Operations Plan	41

5 IMPLEMENTATION DETAILS

5.1 Development and Deployment Setup 42

5.2 Algorithms and Flowcharts 42

5.3 Testing 44

6 RESULTS AND DISCUSSION 46

7 CONCLUSION

7.1 Conclusion 53

7.2 Future developments 53

7.3 Research Issues 54

7.4 Implementation Issues 54

REFERENCES 55

LIST OF FIGURES

Fig. No	Figure Title	Pg. No
1.1	Agriculture Lands	1
1.3.1	Global land use for food production	2
1.3.2	Agriculture Contribution to economic growth	3
1.4.1	Crop management system	4
1.5	Electric fence in agriculture lands	5
1.6	Smart farming based on embedded systems	6
3.2.1	Arduino IDE and Arduino UNO Board	15
3.2.2	Pin Description Arduino UNO Board	15
3.2.3	Data Sheet of the Arduino UNO Board	16
3.2.4	I2C 16X2 LCD Display	17
3.2.5	Data Sheet of I2C 16X2 LCD Display	18
3.2.6	GSM SIM800A Module	19
3.2.7	Soil Moisture sensor	19
3.2.8	Data Sheet of soil Moisture sensor	20
3.2.9	MQ2 Smoke Sensor	21
3.2.10	Datasheet of MQ2 Smoke Sensor	21
3.2.11	PIR Sensor	22
3.2.12	Ultrasonic Sensor	24
3.2.13	NPK Sensor	26
3.2.14	Specifications of NPK Sensor	26
3.2.15	Data Sheet of NPK Sensor	27
3.2.16	DHT11 Sensor	28
3.2.17	RS485 Modbus Module	30
3.2.18	Hardware of Modbus RS485	30
3.2.19	Specifications of Modbus RS485	31

3.2.20	Modbus Module	31
3.2.21	Safety measure for Modbus Module	31
4.2.1	Flow Chart of existing methodology	34
4.3.1	Block diagram of proposed methodology	38
4.3.2	Overall design of Proposed methodology	39
5.2.1	Flow Chart of Proposed methodology	43
5.3.1	Components	44
5.3.2	Connectivity simulation circuit	45
5.3.3	Working simulated circuit	45
6.1	Set Up on Display	47
6.2	Temperature and Humidity Display	47
6.3	The motor is off when moisture in the soil increases	48
6.4	Smoke detected evacuate alert message	49
6.5	Serial monitor display of NPK values from sensor	49
6.6	Alert message to user’s mobile using GSM	50
6.7	Complete project setup	51
6.8	The message sent to the owner’s mobile through the GSM	51

LIST OF TABLES

Table No.	Title	Page No
3.1	product parameters	17
3.2	PIR sensor module pinout configuration	22
3.3	Electric Parameters of ultrasonic sensor	25
4.1	Costs of components	40

CHAPTER 1
INTRODUCTION

1.1 AGRICULTURE

The science, art, and practice of producing plants and keeping animals for food, energy, fiber, and other things is known as agriculture. It encompasses a variety of tasks, including preparing the soil, planting, watering, fertilizing, controlling pests and diseases, harvesting, storing, and marketing crops, as well as taking care of and managing livestock. Since the beginning of civilization, agriculture has been essential to human communities, and it still plays a significant part in feeding the world's population and supplying raw materials for industry. With the invention of new technology, techniques, and systems that have raised yields, enhanced efficiency, and lessening the environmental effect of farming, the practice of agriculture has experienced considerable changes throughout history.

Fig:1.1: Agriculture lands

1.2 Farming

On an area of land, farming involves planting crops and raising animals for food, fiber, and other items. Preparing the land, planting crops, taking care of livestock, and collecting produce or animal products are just a few of the many tasks involved. Providing food and raw materials for many industries, farming has been a fundamental activity for human society for thousands of years. Traditional small-

scale subsistence farming, large-scale commercial farming, and specialized farming techniques like organic farming or hydroponics are just a few of the several ways that people engage in farming. Individual farmers, families, or members of a bigger agricultural business or cooperative are all possible employment arrangements for farmers. Modern farming frequently makes use of cutting-edge machinery and technology to increase productivity and yields while reducing its negative environmental effect.

1.3 Importance of Farming

There are several reasons why farming is important, such as:

- Food production: Agriculture is the main source of human food and is essential to sustaining the world's expanding population. Fresh fruits, vegetables, cereals, and meats would not be available to us if agriculture did not exist.

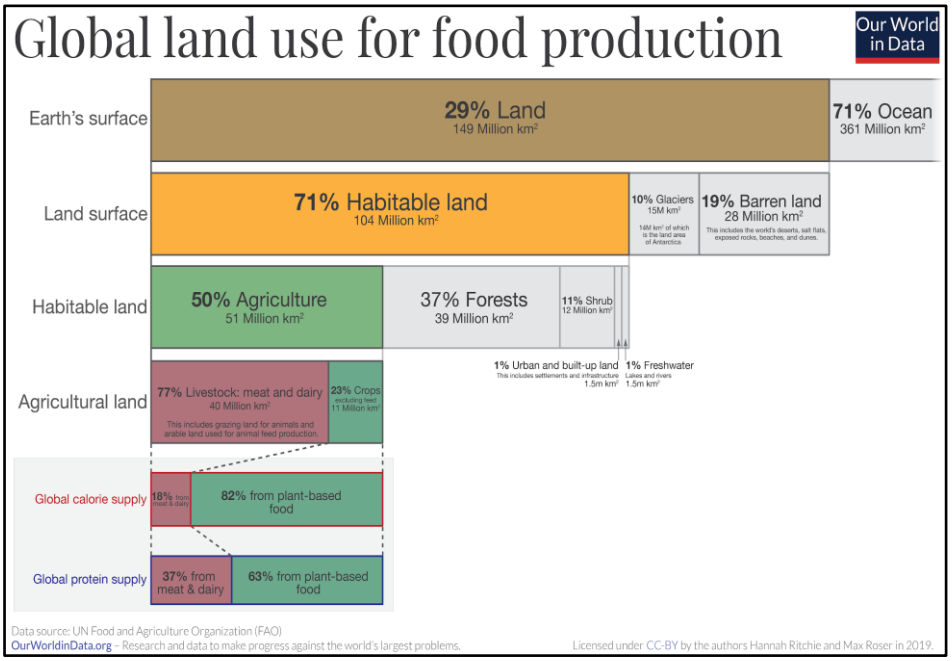

Fig:1.3.1: Global land use for food production

- Benefits to the economy: Agriculture contributes significantly to the global economy by creating millions of employments. Additionally, it is a crucial source of revenue for farmers and agricultural enterprises as well as a way for many nations to gain foreign currency.

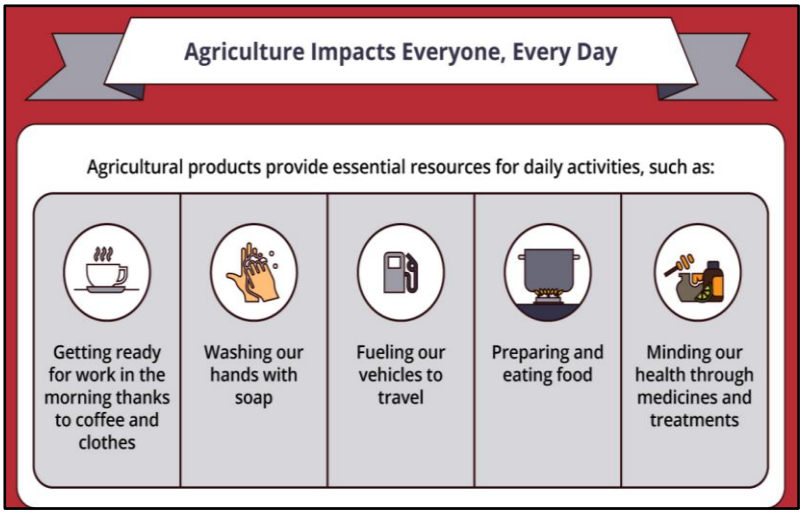

Fig:1.3.2: Agriculture contribution to economic growth

- Environmental advantages: Good agricultural management may help maintain and enhance soil fertility, water quality, and biodiversity. Farmers may lessen the negative consequences of climate change and the impact of agriculture on the environment by employing sustainable agricultural techniques.

1.4 Significance of protecting crops

Protecting crops is of utmost significance as it ensures food security for the growing population and promotes sustainable agriculture. Crops are vulnerable to various factors such as pests, diseases, extreme weather conditions, and natural disasters, which can result in substantial yield losses and affect the livelihoods of farmers. By protecting crops through various measures such as integrated pest management, crop rotation, and the use of resistant crop varieties, farmers can increase their yield and income while reducing the use of harmful pesticides and preserving the natural ecosystem. Additionally, protecting crops can also ensure a stable supply of food for communities and help mitigate the effects of climate change by reducing greenhouse gas emissions from agricultural practices. Therefore, protecting crops is vital for promoting sustainable agriculture, achieving food security, and preserving the environment.

Farming is vital to the economies of many countries throughout the world. The agricultural sector is the mainstay of the country Agriculture is one of the most important industries in the backbone of the economy. is the main source of the domestic product and reaches the food crisis and resulting in the major production of food and producing many raw materials for industries.

Fig:1.4.1: Crop management system

For agricultural production and sustainability, protecting crops against animal damage is crucial. Crops can suffer severe harm from animals such as deer, rabbits, rats, and birds when they consume, destroy, or contaminate them. As a result, producers may experience decreased yields and financial losses, while consumers may experience food shortages and price rises. While the greater part of India's population is indulged in farming, the farmers still experience numerous issues. Accordingly, the interruption of creatures in local locations is being raised step by step which is influencing human existence, property that makes struggle among humans and creatures.

Agriculture is the foundation of the economy, nevertheless, would bring about gigantic harvest misfortune due to creature interruption in agricultural land. Elephants and other creatures entering into people’s place of residence has brought adverse consequences in different ways, for example, crop annihilation, harm to food stores, water supply, homes, and other properties, injury, and human demise. Conventional techniques trailed by farmers aren't very viable and it’s achievable to recruit monitors to focus an eye on the yields and prevent nature creatures, consequently, this zone is to be checked consistently to forestall sections of this sort of creatures or other undesirable.

1.5 Ideology

But this system won’t provide the complete solution due to inaccurate detection of animals while climbing into the fields. Electric fences can be used to protect crops from animals. But this electric fence system has a greater chance of harmful death of wild animals and humans. The Light Dependent Resistor Module detects the light which falls on this sensor and can give an estimated output to tell the microcontroller whether it is day or night. During the daytime, the movement detection system and the sound detection system along with a high-frequency sound emitter protect the crops. During the night, as detected by the LDR module, the ultrasonic pest repellent module with piezo sound emitter generates a comparatively low-frequency sound to protect the crops from small insects which come out when it is dark. Our main purpose is to develop a system that will make animals stay away from the field and avoid loss for the farmer.

Fig:1.5: Electric fence in Agriculture lands

This will act as the shield for the crop from damage that obliquely increases the yield of the crop. The developed system won't be harmful and detrimental to animals but also to men. The main objective of this system is to make a smart security system for crop protection by using an Embedded system in India's agricultural land. Farming has unendingly been India's most critical economic sector.

1.6 Embedded System in the farming sector

The growth of embedded systems in the farming sector has revolutionized the way farmers manage their crops and livestock. Embedded systems are computer systems that are integrated into other devices or machines, and in agriculture, they are used to monitor and control various aspects of the farming process.The growth of embedded systems in farming is expected to continue as technology advances and the demand for sustainable and efficient food production increases.

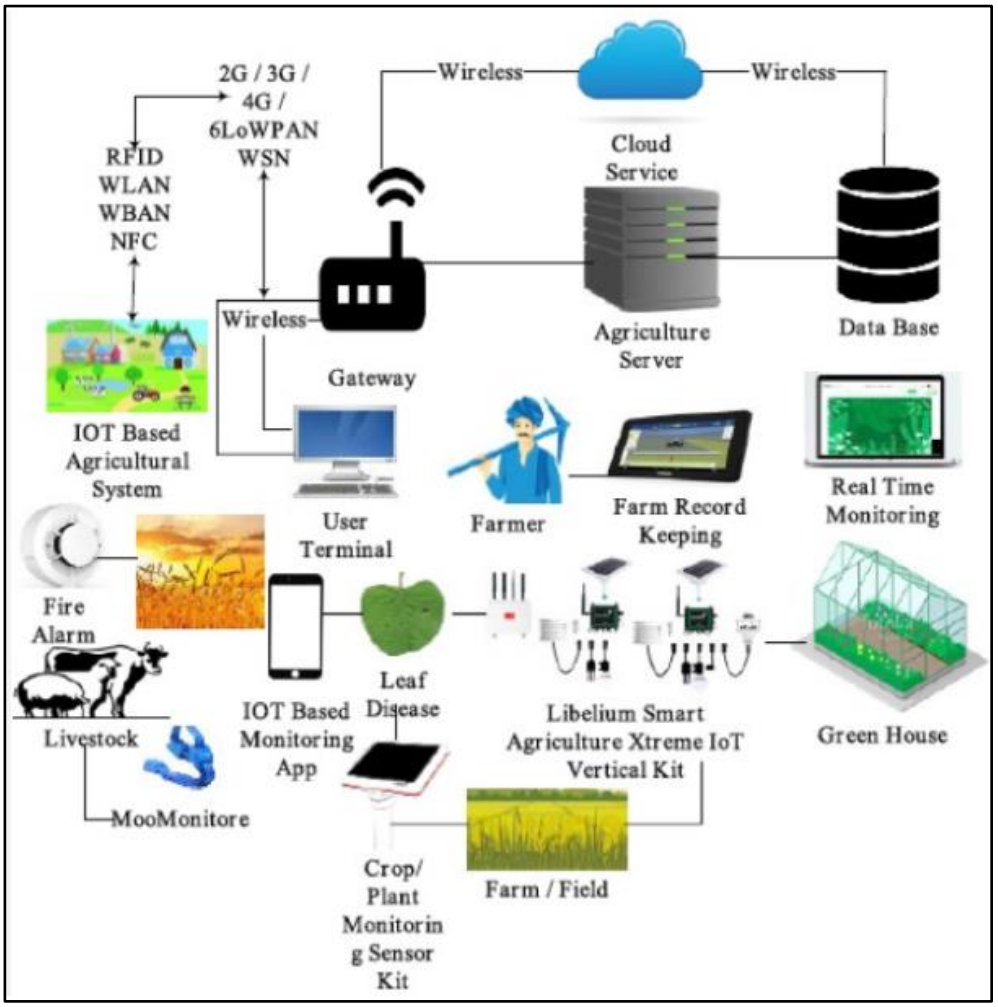

Fig.1.6 smart farming based on embedded systems

CHAPTER 2
LITERATURE SURVEY

2.1 Inferences from the Literature Survey

The soil moisture sensor is one kind of sensor used to gauge the volumetric content of water within the soil. These sensors measure the volumetric water content not directly with the help of some other rules of soil like dielectric constant, and electrical resistance.

The paper titled "Smart Irrigation Using Internet of Things" authored by Anubhav Gulati and Sanjeev Thakur, presented at the 2018 8th International Conference on Cloud Computing, Data Science & Engineering, is a significant contribution to the field of precision agriculture [1]. The authors propose a novel IoT-based smart irrigation system that uses various sensors, data analytics, and machine learning techniques to optimize water usage in agriculture. The paper discusses the design, implementation, and evaluation of the proposed system, highlighting its advantages over traditional irrigation methods. The research findings suggest that the proposed system can lead to significant improvements in crop yield and water conservation, making it a promising solution to the challenges faced by farmers worldwide. Overall, the paper presents a comprehensive and innovative approach to addressing the issue of water scarcity in agriculture using IoT and data analytics.

The paper titled "Methods for Rapid Testing of Plant and Soil Nutrients" was presented at the 4th IEEE International Conference in 2017 by Christian Dimkpa, P.S Bindraban, Joan E Mclean, and Lydiah Gatere [2]. The paper aims to propose and evaluate new, rapid methods for testing the nutrient content of plants and soil. The authors highlight the importance of nutrient management in agriculture and the limitations of traditional testing methods. They present new techniques such as the use of spectral analysis, fluorescence, and enzyme-linked immunosorbent assay (ELISA) that can provide quick and accurate results. The paper concludes that these methods have great potential to improve nutrient management practices and increase crop yield in a cost-effective manner.

The publication "Interpretation of Soil Test Reports for Agriculture" by Courtney Pariera Dinkins and Clain Jones is a valuable self-learning resource provided by Montana State University in 2013 [3]. The article emphasizes the significance of soil testing for agricultural practices and explains how to interpret soil test reports. The authors discuss the importance of understanding soil nutrient availability, pH, and salinity, as well as how to use the information from soil test reports to make informed decisions about fertilization and soil management. The article is an excellent resource for farmers and agricultural professionals seeking to optimize their soil health and crop productivity.

The paper titled "Sensor Based Crop Protection System with IoT monitored Automatic Irrigation" was presented by Damini Kalra, Praveen Kumar, K. Singh, and Apurva Soni at the 2nd International conference on Advances in Computing, Communication Control and Networking in 2020 [4]. The paper proposes a system that utilizes sensors to monitor crops and automatically irrigate them through an IoT-based approach. This technology can help optimize crop growth, reduce water waste, and prevent crop damage, ultimately leading to better yields and increased profits for farmers.

In "Soil and Plant Testing as a Basis of Fertilizer Recommendation," Dr. A. Cottenie explains the importance of soil and plant testing in determining the appropriate fertilizer recommendations for crops [5]. The bulletin, published by the Food and Agriculture Organization (FAO), emphasizes the need for accurate analysis of soil and plant samples to identify nutrient deficiencies and excesses. By using this information to create tailored fertilizer recommendations, farmers can optimize crop yields while minimizing environmental damage from excessive fertilizer use.

The article "Animal presence detection for elephants and extruding method based on bee frequency" was published in IEEE in 2018 and was authored by Eka Maulana[6]. The paper discusses a method for detecting the presence of elephants using the frequency of bee sounds. Meanwhile, V. Deshpande's article, "Design and implementation of an intelligent security system for farm protection from wild animals," which was published in the International Journal of Science and Research in 2016, presents an intelligent security system that protects farms from wild animals.

In "IoT Based Low-Cost Smart Irrigation System," K. Pernapati discusses the development of a low-cost, smart irrigation system using the Internet of Things (IoT) [8]. The system utilizes sensors to monitor various environmental factors, such as soil moisture and temperature, and transmits the data to a cloud server. The server then processes the data and sends instructions to the irrigation system, which automatically adjusts the water flow based on the real-time environmental conditions. The system offers an efficient and cost-effective solution to irrigation management, helping to conserve water resources and increase crop yield.

In their 2002 article, K. Rao, R. Maikhuri, S. Nautiyal, and K. G. Saxena present a case study on the issue of crop damage and livestock depredation caused by wildlife in the Nanda Devi Biosphere Reserve in India [9]. The authors highlight the need for a better understanding of the complex interactions between humans and wildlife in order to develop effective management strategies that balance the conservation of wildlife with the needs of local communities. Through their study, they provide valuable insights into the socio-economic factors that influence human-wildlife conflicts in the region.

In the article titled "Smart Agriculture: A Bliss to Farmers" by Madhu.b, published in the International Journal of Engineering Sciences and Research Technology in April 2017, the author discusses the benefits of smart agriculture for farmers [11]. By utilizing modern technologies such as IoT, sensors, and drones, farmers can optimize their farming practices, reduce waste, and increase their yield. The article highlights the importance of smart agriculture in addressing the challenges faced by the agriculture industry, such as climate change and food security, and emphasizes the need for continued research and development in this field.

Mary Pletsch Jones' thesis, "Evaluating Nutrient Availability in Low Fertility Soils With Resin Capsules and Conventional Soil Tests," explores the effectiveness of using resin capsules to measure nutrient availability in low fertility soils [12]. The study compares the results of using resin capsules to conventional soil tests and concludes that resin capsules provide a more accurate measure of nutrient availability in low fertility soils. This research has important implications for improving soil management practices and crop yields in areas with low fertility soils.

The article "Smart Crop Protection System From Animals" by M. Jaya Prabha, R. Ramprabha, V VasuBindhra, and C. AshaBeula was published in the International Journal of Engineering and Advanced Technology in April 2020 [13]. The article discusses the development of a smart crop protection system that utilizes sensors on animals to detect and deter crop damage by wild animals. The system is designed to improve crop yields and reduce human-wildlife conflicts. The authors provide a detailed explanation of the system's design, implementation, and potential benefits. This research has important implications for sustainable agriculture and wildlife conservation efforts.

In their paper titled "A Smart Crop Protection against Animal Attack," Mr. P. Venkatesh Rao, Mr. Ch Siva Rama Krishna, and Mr. M Samba Siva Reddy propose a new approach to protecting crops from animal attacks [14]. The paper, published in the International Journal of Scientific Research and Review in 2019, presents a smart system that uses sensors and cameras to detect animal activity and trigger deterrent measures. The authors suggest that this approach could be a more effective and sustainable solution to crop protection than traditional methods.

In their paper titled "IoT Based Smart Agriculture," Nikesh Gondchawar discusses the potential of using Internet of Things (IoT) technology in agriculture [15]. The paper, published in the International Journal of Advanced Research in Computer and Communication Engineering in June 2016, outlines a system that uses sensors and data analysis to optimize irrigation, monitor crop growth, and detect diseases in real-time. The author suggests that this approach can improve crop yields, reduce water consumption, and increase efficiency in agriculture.

In the paper "Smart Agriculture System Using IoT," P. Munaswamy explores the implementation of an IoT-based system in agriculture [16]. The paper, published in the International Journal of Recent Technology and Engineering in January 2019, proposes a system that uses sensors, data analysis, and automation to optimize crop production, reduce water consumption, and detect diseases. The author suggests that this approach can improve the efficiency and sustainability of agriculture while reducing labor costs and increasing yields.

The paper "Smart Agro Using Arduino and GSM" by P. Rekha, T. Saranya, P. Preethi, L. Saraswathi, and G. Sobhana explores the potential of using Arduino and GSM technology in agriculture [17]. The paper, published in the International Journal of Emerging Technologies in Engineering Research in March 2017,

presents a system that uses sensors and data analysis to optimize irrigation, detect soil moisture, and control greenhouse temperature. The authors suggest that this approach can increase crop yields, reduce water consumption, and provide real-time monitoring of the farming environment. The paper provides valuable insights into the potential of technology to revolutionize agriculture and improve food security.

The paper "IoT Solutions for Crop Protection Against Wild Animal Attacks" by S. Giordano, Ilias Nektarios Seitanidis, Mike Oluwatayo Ojo, and Davide Adami explores the use of IoT technology in protecting crops from wild animal attacks [20]. The paper was presented at the 2018 IEEE International Conference on Environmental Engineering in March 2018. The authors propose a system that uses sensors and cameras to detect and deter wild animals, such as elephants and deer, from entering agricultural areas. The system can also send alerts to farmers in real-time, allowing them to take immediate action to protect their crops.

2.2 Open problems in Existing System

Sensor Integration: The system must be able to collect data from different sensors, such as temperature, humidity, soil moisture, and light, and integrate the data to provide a comprehensive view of the farm.

Scalability: The scalability of the system is another challenge. The system must be able to support large-scale farming operations, and there is a need to develop scalable architectures that can handle the large amounts of data generated by such operations.

Connectivity: The system must be able to connect to the internet or other communication networks to send data to the cloud or other remote locations.

Security: The system must be able to protect the data collected from the sensors and ensure that the system is not vulnerable to cyber-attacks.

CHAPTER 3

REQUIREMENT ANALYSIS

3.1 FEASIBILITY STUDIES/RISK ANALYSIS OF THE PROJECT

Feasibility Studies of the Project:

a) Technical feasibility:

- Hardware: Arduino is widely used for prototyping and building embedded systems. It is an open-source platform with a large community of developers. Additionally, the sensors and actuators required for smart agriculture are readily available and can be easily integrated with Arduino.
- Software: Arduino IDE is easy to use and has a simple programming language based on Embedded C. It also has a vast library of functions for different sensors and actuators.

b) Economic feasibility:

- Cost of hardware and software: The cost of an Arduino board and sensors is relatively low. Moreover, Arduino IDE is free and open-source, which makes it easy to develop the system without incurring high software costs.
- Maintenance cost: The maintenance cost of the smart agriculture system will depend on the scale of the project and the frequency of maintenance required. However, since the system is designed to monitor and automate various agricultural processes, it is expected to reduce the overall maintenance costs in the long run.

c) Operational feasibility:

- Ease of use: The smart agriculture system will be designed to be easy to use and user-friendly. Farmers will be able to monitor their crops remotely and make adjustments as needed. This will save time and effort, and the system will be more accessible to farmers who may not have technical expertise.
- Compatibility: The system will be designed to be compatible with various sensors and actuators commonly used in agriculture. Therefore, it will be flexible and can be easily integrated with existing agricultural equipment and systems.

d) Schedule feasibility:

- Timeframe: The development of the smart agriculture system using Arduino is expected to take a few months to complete. This will depend on the complexity of the system and the number of developers working on the project.
- Timeline: The project timeline will be determined by the development team and will take into account factors such as resource availability, technical difficulties, and testing phases.

Risk Analysis of the Project:

a) Identify potential risks: Start by listing down all the potential risks that may affect the project's success. This can include hardware failure, software bugs, data loss, power outage, network connectivity issues, and others.

b) Assess the likelihood and impact of each risk: Once we have identified the potential risks, assess the likelihood and impact of each one. Consider the probability of the risk occurring and the potential impact on the project's schedule, budget, and functionality.

c) Develop a risk management plan: Based on the assessment of risks, develop a risk management plan. This should include measures to mitigate, avoid, transfer, or accept each risk.

d) Implement risk management measures: Once we have developed a risk management plan, implement the necessary measures to mitigate the identified risks. This may involve testing hardware and software components for reliability, securing data backups, and implementing disaster recovery procedures.

e) Monitor and evaluate risks: Continuously monitor and evaluate the risks throughout the project's lifecycle. Update the risk management plan as necessary to address new risks or changes to existing risks.

f) Communicate risks to stakeholders: Keep stakeholders informed of the identified risks and the steps being taken to manage them. This can help to maintain stakeholder confidence in the project's success and ensure that everyone is aware of potential project risks.

3.2 HARDWARE AND SOFTWARE REQUIREMENTS DOCUMENT

REQUIREMENTS:

a) Introduction: This section should provide an overview of the system and its purpose. It should include information about the crop protection system, its features, and the Arduino Uno embedded system.

b) Functional requirements: This section should describe the specific functions that the crop protection system will perform. This may include monitoring soil moisture, temperature, and other environmental factors, as well as controlling irrigation, fertilizer delivery, and pest control.

c) Non-functional requirements: This section should describe the non-functional aspects of the system, such as performance, reliability, and maintainability.

d) System architecture: This section should describe the overall system architecture, including the hardware components (Arduino Uno, sensors, actuators, etc.) and the software components (operating system, programming language, etc.).

e) User interface: This section should describe the user interface of the system, including any display screens, buttons, or other input/output devices.

f) Data management: This section should describe how the system will store and manage data, including sensor readings and system logs.

g) Security and privacy: This section should describe any security and privacy considerations for the system, such as data encryption, access control, and user authentication.

h) Testing and validation: This section should describe how the system will be tested and validated to ensure that it meets the requirements.

i) Implementation and deployment: This section should describe the process for implementing and deploying the system, including any hardware or software installation procedures.

j) Maintenance and support: This section should describe how the system will be maintained and supported over time, including any software updates or hardware upgrades that may be required.

SOFTWARE AND HARDWARE SPECIFICATION DOCUMENT

1. Microcontroller - Arduino Uno and Arduino Ide Software

The Arduino Interfaced Development Environment, or more also known as the Arduino Ide software (IDE), is indeed available. It includes a scripting language for a scripting language, a user interface, a text terminal, a toolbox with buttons for frequently performed functions, and a variety of menus. It interfaces with the Arduino hardware to upload applications and communicate with them.

Fig:3.2.1: Arduino IDE and Arduino UNO Board

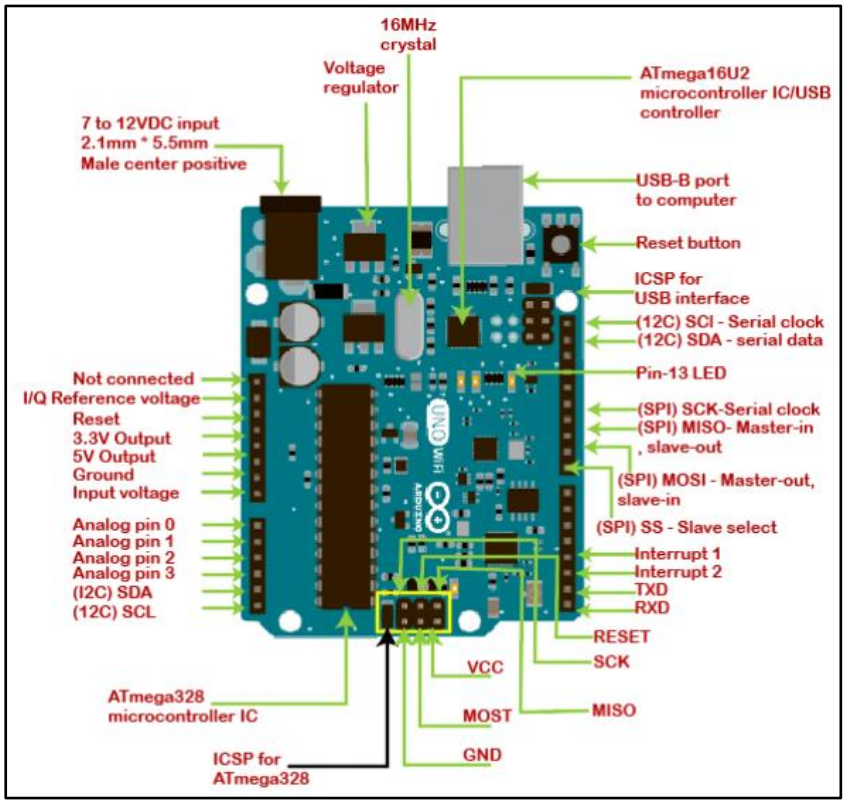

Fig: 3.2.2: Pin Description Arduino UNO Board

The board has a total of 20 pins that can be used for input and output operations. The power pins on the Arduino Uno R3 are used for supplying power to the board. There are two power pins, namely the 5V pin and the 3.3V pin. The analog pins on the Arduino Uno R3 are used to read analog signals. The board has six analog pins, labeled A0 to A5. These pins can read voltage values between 0 and 5 volts and convert them into digital signals that can be read by the board. These pins are particularly useful for sensors that produce analog outputs, such as temperature sensors, light sensors, and potentiometers. The digital pins on the Arduino Uno R3 are used for both input and output operations. The board has a total of 14 digital pins, labeled 0 to 13. These pins can be configured as either input or output pins, depending on the requirement of the project. These pins can be used to control various electronic components, such as LEDs, motors, and relays. They can also be used to read digital signals from sensors or other input devices.

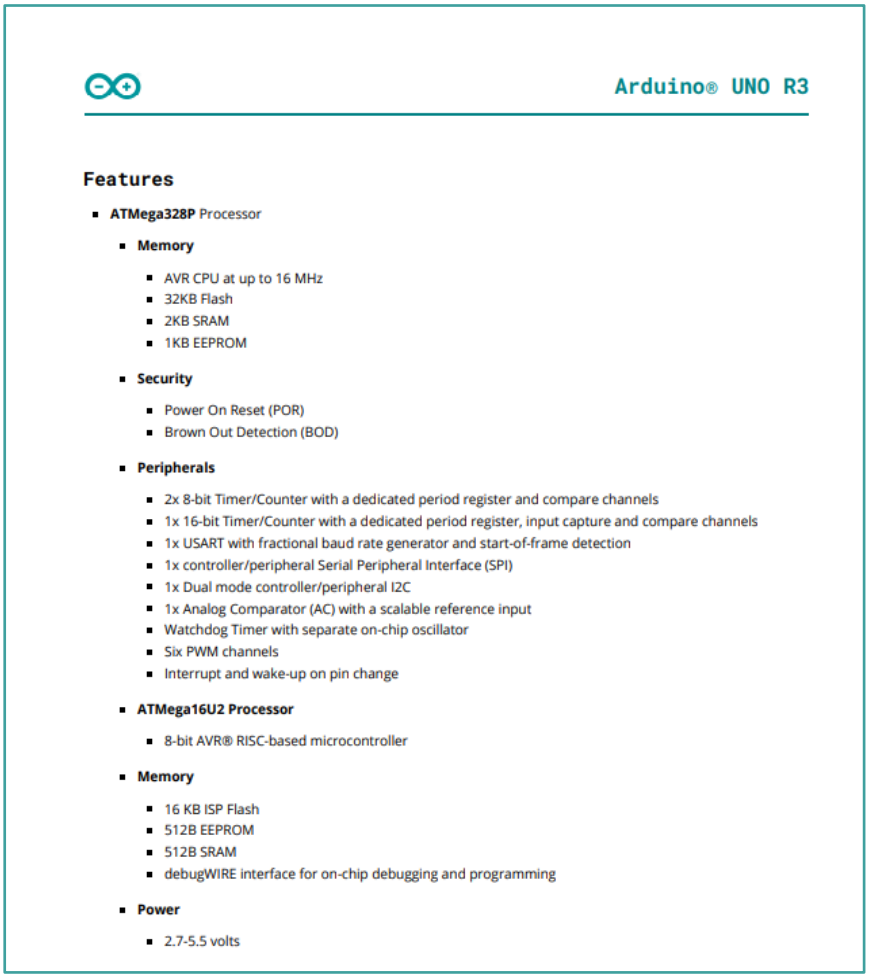

Arduino® UNO R3

Features

- **ATMega328P** Processor
  - **Memory**
    - AVR CPU at up to 16 MHz
    - 32KB Flash
    - 2KB SRAM
    - 1KB EEPROM
  - **Security**
    - Power On Reset (POR)
    - Brown Out Detection (BOD)
  - **Peripherals**
    - 2x 8-bit Timer/Counter with a dedicated period register and compare channels
    - 1x 16-bit Timer/Counter with a dedicated period register, input capture and compare channels
    - 1x USART with fractional baud rate generator and start-of-frame detection
    - 1x controller/peripheral Serial Peripheral Interface (SPI)
    - 1x Dual mode controller/peripheral I2C
    - 1x Analog Comparator (AC) with a scalable reference input
    - Watchdog Timer with separate on-chip oscillator
    - Six PWM channels
    - Interrupt and wake-up on pin change
  - **ATMega16U2 Processor**
    - 8-bit AVR® RISC-based microcontroller
  - **Memory**
    - 16 KB ISP Flash
    - 512B EEPROM
    - 512B SRAM
    - debugWIRE interface for on-chip debugging and programming
  - **Power**
    - 2.7-5.5 volts

Fig: 3.2.3: Data Sheet of the Arduino UNO Board

2. I2C 16X2 Liquid Crystal Display Module:

The I2C 16x2 Arduino LCD Screen is using an I2C communication interface. It is able to display 16×2 characters on 2 lines, and white characters on blue background. Both must be connected via pulled-up resistors. The usage voltages are standard as 5V and 3.3V. VCC and GND of course. The LCD display works with 5 Volts. So, we go for the 5V Pin. The values shown on the display can be either simple text or numerical values read by the sensors

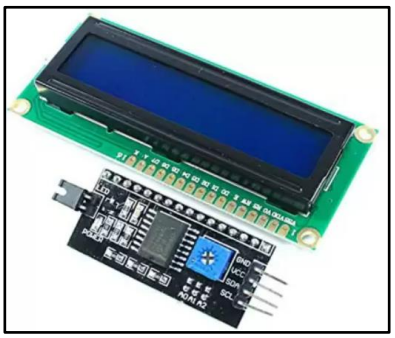

Fig: 3.2.4: I2C 16X2 LCD Display

Table 3.1: Product parameters

Name	Parameter
Display Color	Blue Backlight
Screen Size	2.95 mm wide x 4.35 mm high.
Type	i2C LCD
Adapter	PCF8574
Module Interface	8-bit Parallel interface
Active Area	38.0 × 7.98(mm)
Module PCB Size	66.0x28(mm)
Operating Temperature	-20℃ to +70℃
Storage Temperature	-30℃ to +80℃.
Operating Voltage	3V/5V
Power Consumption	200mA

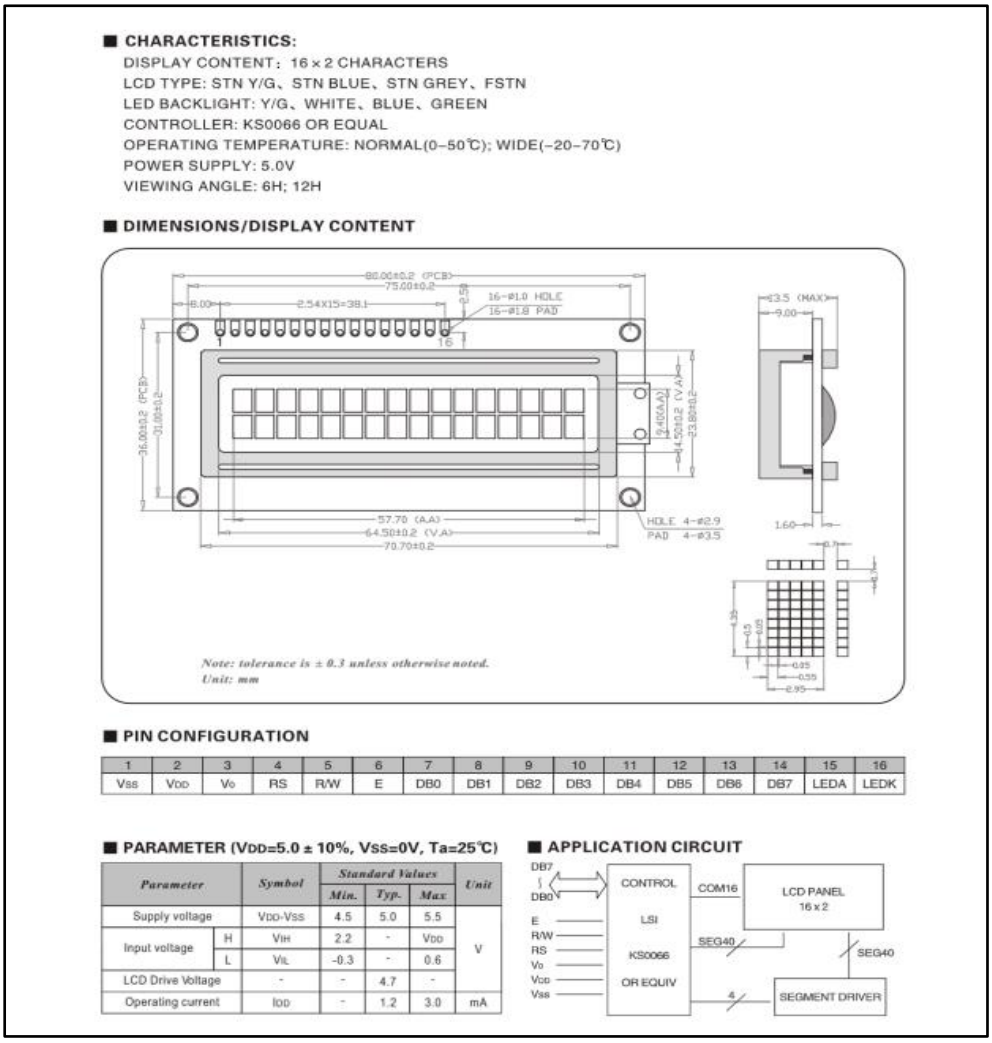

■ **CHARACTERISTICS:**

DISPLAY CONTENT：16 × 2 CHARACTERS
LCD TYPE: STN Y/G、STN BLUE、STN GREY、FSTN
LED BACKLIGHT: Y/G、WHITE、BLUE、GREEN
CONTROLLER: KS0066 OR EQUAL
OPERATING TEMPERATURE: NORMAL(0–50℃); WIDE(–20–70℃)
POWER SUPPLY: 5.0V
VIEWING ANGLE: 6H; 12H

■ **DIMENSIONS/DISPLAY CONTENT**

■ **PIN CONFIGURATION**

1	2	3	4	5	6	7	8	9	10	11	12	13	14	15	16
Vss	VDD	Vo	RS	R/W	E	DB0	DB1	DB2	DB3	DB4	DB5	DB6	DB7	LEDA	LEDK

■ **PARAMETER (VDD=5.0 ± 10%, VSS=0V, Ta=25℃)**

Parameter		*Symbol*	*Standard Values*			*Unit*
			Min.	*Typ.*	*Max*	
Supply voltage		VDD-VSS	4.5	5.0	5.5	V
Input voltage	H	VIH	2.2	-	VDD	
	L	VIL	-0.3	-	0.6	
LCD Drive Voltage		-	-	4.7	-	
Operating current		IDD	-	1.2	3.0	mA

■ **APPLICATION CIRCUIT**

Fig.3.2.5 Data Sheet of I2C 16X2 LCD Display

3. GSM SIM800A Module:

The SIM800A Quad-Band GSM/GPRS Module with RS232 Interface is a highly capable and versatile communication solution for embedded applications. With its compact LGA form factor, it can be easily integrated into a wide range of customer devices. Supporting Quad-band GSM/GPRS frequencies of 850/900/1800/1900 MHz, this module is capable of transmitting voice, SMS, and data information with low power consumption. Its comprehensive feature set makes it an ideal solution for a variety of communication applications, and its reliable performance ensures that customers can rely on it for all of their communication needs. Whether you need to transmit data, voice, or SMS messages, the SIM800A Quad-Band GSM/GPRS Module is a robust and reliable solution that can meet your needs.

Fig.3.2.6 GSM SIM800A Module

4. Soil Moisture Sensor

Soil moisture sensors are an essential component of crop protection systems in embedded systems. These sensors measure the moisture content in the soil and provide farmers with information on when to irrigate their crops. This information can help farmers optimize their irrigation practices, reduce water usage, and improve crop yields.Soil moisture sensors are typically placed in the soil near the roots of plants and measure the amount of water in the soil by using either electrical resistance or capacitance. The data from these sensors is then transmitted to the embedded system, which can analyze the data and make decisions about when to water the crops.

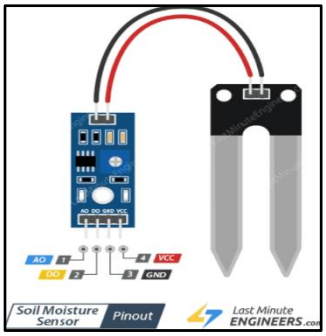

Fig.3.2.7 Soil Moisture Sensor

SOIL MOISTURE RECORDER SPECIFICATIONS

Data Recorder

Measurement Range:	+/- 1200mV
Accuracy:	+/-0.01% FSR
Input range:	0 to 2.5V DC
Memory:	32,767 readings; software configurable memory wrap
Reading Rate:	1 reading every 2 seconds to 1 every 12 hours
Input Connection:	Removable screw terminal plug
Operating Environment:	-40 to +80°C (-40 to +176°F), 0-95% RH, non-condensing
Battery Type:	3.6V Lithium Battery included; **user replaceable**
Battery Life:	10 years typical @ 15 min reading rate
Dimensions:	0.8"x1.7"x2.7"(21mmx44mmx69mm)
Weight:	2 oz. (56 g)
Weatherproof Enclosure:	Anodized aluminum case w/mounting flange. Communications port plug 3.5"x2.9"x1.1"(87mmx73mmx27mm) 7 oz. (198 g)

Soil Moisture Probes

Measurement Range:	(EC-5) 0 to 100% VWC saturation (EC-20) 0 to 40% VWC saturation
Measurement Type:	VWC (Volumetric Water Content)
Measurement Accuracy:	(EC-5) +/- 3% typical, ALL soils (EC-20) +/- 4% typical on low EC and medium textured soils (Both models) +/-1% with soil specific calibration
Calibration:	Digital calibration through software
Calibration Date:	Automatically recorded within device
Life Expectancy (probes):	3-5 years
Measurement Time:	10ms
Measurement Resolution:	$0.002m^3/m^3$
Operating Environment:	-40 to +60 degC (-40 t0 +140 degF), 0-100% RH (EC-5 and EC-20 models)
Power Requirement (probes)	Powered from data recorder's internal battery. No external power required.
Dimensions (probes):	(EC-5) 2.1"x0.6"x0.06" (55mm x 15mm x 1.5mm) (Cable length) - 16' (5 m), (tinned, wire leads) (EC-20) 10"x1.25"x0.06" (255mmx32mm x1.5mm) Cable length) - 16' (5 m), (tinned, wire leads)

SOFTWARE FEATURES

Multiple Graphs:	Simultaneously analyze data from several units or deployments; easily switch to a single data series	**Statistics:**	Calculate averages, min, max and standard deviation
Real-Time Recording:	Collect and display data in real-time while continuing to log	**Export Data:**	Export data in a variety of common formats, or switch to Excel® with a single click
Data Table:	Instantly access tabular view for detailed dates, times, values, and annotations	**Calibration:**	Automatically calculate and store calibration parameters
Scaling Options:	Autoscale function fits data to the screen, or allows user to manually enter their own values	**Logger Configuration:**	Easy set up and launch of data loggers with immediate or delayed start, preferred sample rate, and device ID
Printing:	Automatically print graphical or tabular data	**Communications:**	Automatic or user-enabled communications port configuration (Baud rate, COM port selection)

Fig.3.2.8 Datasheet of Soil Moisture Sensor

5. Smoke Detection Sensor:

Smoke detection sensors are widely used in various industries to detect and alert about the presence of smoke or fire. One such application is in crop protection systems, where MQ2 smoke detection sensors are used as a part of embedded systems.MQ2 smoke detection sensors are known for their high sensitivity toward the smoke and other combustible gases. These sensors use a combination of semiconductor and metal oxide layers to detect the presence of smoke or gas. When the sensor detects smoke, it triggers an alarm or sends a signal to the microcontroller, which is a part of the embedded system. Crop protection systems that use MQ2 smoke detection sensors are beneficial for farmers as they help in reducing the risk of crop damage due to fire. Moreover, the use of embedded systems with MQ2 smoke detection sensors ensures real-time monitoring of the crop fields, enabling farmers to take timely action in case of any emergency.

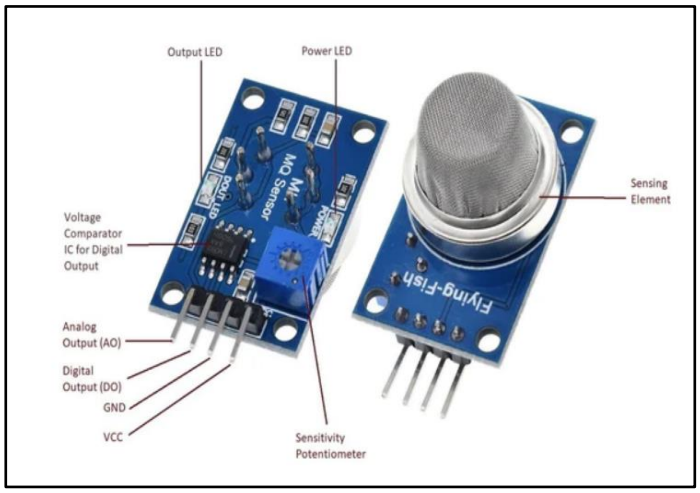

Fig.3.2.9 MQ2 Smoke Sensor

TECHNICAL DATA MQ-2 GAS SENSOR

FEATURES

Wide detecting scope — Fast response and High sensitivity
Stable and long life — Simple drive circuit

APPLICATION

They are used in gas leakage detecting equipments in family and industry, are suitable for detecting of LPG, i-butane, propane, methane ,alcohol, Hydrogen, smoke.

SPECIFICATIONS

A. Standard work condition

Symbol	Parameter name	Technical condition	Remarks
Vc	Circuit voltage	5V±0.1	AC OR DC
V_H	Heating voltage	5V±0.1	ACOR DC
R_L	Load resistance	can adjust	
R_H	Heater resistance	33Ω±5%	Room Tem
P_H	Heating consumption	less than 800mw	

B. Environment condition

Symbol	Parameter name	Technical condition	Remarks
Tao	Using Tem	-20℃-50℃	
Tas	Storage Tem	-20℃-70℃	
R_H	Related humidity	less than 95%Rh	
O_2	Oxygen concentration	21%(standard condition)Oxygen concentration can affect sensitivity	minimum value is over 2%

C. Sensitivity characteristic

Symbol	Parameter name	Technical parameter	Remarks
Rs	Sensing Resistance	3KΩ-30KΩ (1000ppm iso-butane)	Detecting concentration scope: 200ppm-5000ppm LPG and propane 300ppm-5000ppm butane 5000ppm-20000ppm methane 300ppm-5000ppm H_2 100ppm-2000ppm Alcohol
α (3000/1000) isobutane	Concentration Slope rate	≤0.6	
Standard Detecting Condition	Temp: 20℃±2℃ Vc:5V±0.1 Humidity: 65%±5% Vh: 5V±0.1		
Preheat time	Over 24 hour		

D. Structure and configuration, basic measuring circuit

Fig.3.2.10 Data sheet of MQ2 Smoke Sensor

6. PIR Sensor:

A PIR sensor, or a Passive Infrared Sensor, is a device that detects motion by sensing changes in the infrared energy emitted by living organisms. These sensors are commonly used in security systems to detect the presence of intruders, but they can also be used for other applications, such as crop protection systems in embedded systems. In agriculture, PIR sensors can be used to detect the presence of animals or birds that may damage crops. By monitoring the field using PIR sensors, farmers can identify when an animal is present and take appropriate measures to protect their crops.

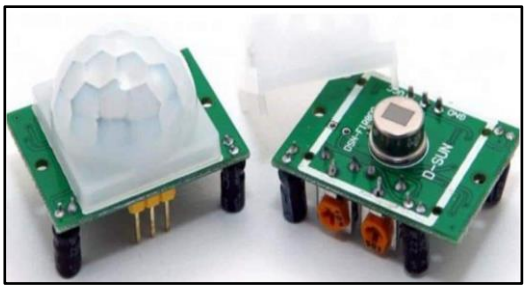

Fig.3.2.11 PIR Sensor

Table 3.2 PIR Sensor Module Pinout Configuration:

Pin	Pin Name	Description
1	Vcc	Input voltage is +5V for typical applications. Can range from 4.5V- 12V
2	High/Low Output (Dout)	Digital pulse high (3.3V) when triggered (motion detected) digital low(0V) when idle (no motion detected
3	Ground	Connected to ground of circuit

PIR Sensor Features:

1. Wide range of input voltage varying from 4. V to 12V (+5V general)
2. Output voltage is High/Low (3.3V TTL)
3. Can distinguish between object movement and human movement
4. Has two operating modes - Repeatable(H) and Non- Repeatable(H)
5. Cover distance of about 120° and 7 meters
6. Low power consumption of 65mA
7. Operating temperature from -20° to +80° Celsius

7. Ultrasonic Sensor:

Using ultrasonic sound waves, an ultrasonic sensor calculates the distance to an item. To share information about the position of an object, an ultrasonic sensor uses a transmitter and receiver to broadcast and receive ultrasonic pulses. Ultrasonic sensors are widely used for object detection and ranging, offering several advantages. To perform a measurement, a short pulse of 10 µs is supplied to the trigger input to start the sensor. Ultrasonic sensors use a cone of ultrasonic waves with a higher divergence angle than light beams, resulting in a footprint of some decimeters due to their higher divergence angle. They can detect angles for each considered distance, making them useful in detecting traffic participants.

These sensors work by emitting high-frequency sound waves that bounce off objects and return to the sensor. The time it takes for the sound wave to return is used to calculate the distance between the sensor and the object. In crop protection systems, ultrasonic sensors are used to detect the presence of pests or animals that may damage crops. Another application of ultrasonic sensors in crop protection systems is to detect the presence of pests such as insects or rodents. These pests can also cause significant damage to crops and are often difficult to detect using other methods. Ultrasonic sensors can be used to detect the movement of these pests and trigger the release of pesticides or other treatments to control their population.

Fig.3.2.12 Ultrasonic sensor

The sensor module requirements are as follows.

- Cost
- Weight
- Community of hobbyists and support
- Accuracy of object detection
- Probability of working in a smoky environment
- Ease of use The HC-SR04 Specifications are listed below.

These specifications are from the Cytron Technologies HC-SR04 User's Manual source

- Power Supply: +5V DC
- Quiescent Current: <2mA
- Working current: 15mA
- Effectual Angle: <15º
- Ranging Distance: 2-400 cm
- Resolution: 0.3 cm
- Measuring Angle: 30º
- Trigger Input Pulse width: 10uS
- Dimension: 45mm x 20mm x 15mm
- Weight: approx. 10 g The HC-SR04's best selling point is its price; it can be purchased at around $2 per unit.

Table 3.3 Electric Parameters of Ultrasonic Sensor

Working Voltage	**DC 5 V**
Working Current	**15mA**
Working Frequency	**40Hz**
Max Range	**4m**
Min Range	**2cm**
MeasuringAngle	**15 degree**
Trigger Input Signal	**10uS TTL pulse**
Echo Output Signal	**Input TTL lever signal and the range in proportion**
Dimension	**45*20*15mm**

Distance calculation

Equation 2. $Distance = \frac{Speed}{170.15\ m} \times \frac{Meters}{100\ cm} \times \frac{1e6\ \mu S}{170.15\ m} \times \frac{58.772\ \mu S}{cm}$

Equation 3. $Distance = \frac{time}{58} = \frac{\mu s}{\mu s/cm} = cm$

8. NPK Sensor

An NPK sensor is a vital component of a crop protection system that is used in embedded systems. NPK sensors are designed to measure the concentration of nitrogen, phosphorus, and potassium in the soil. These three nutrients are critical for plant growth and development, and their availability in the soil can directly impact crop yields. The NPK sensor provides real-time data on the nutrient levels in the soil, allowing farmers to make informed decisions about fertilization and other management practices. Embedded systems are computer systems that are designed to perform specific tasks with minimal user intervention. In the context of crop protection systems, embedded systems can be used to automate the collection and analysis of data from NPK sensors By providing real-time data on soil nutrient levels, these systems can help farmers optimize their fertilizer use and minimize waste. This not only improves crop yields but also reduces the environmental impact of agriculture. As technology continues to evolve, we can expect to see even more sophisticated crop protection systems that incorporate a range of sensors and automation technologies to improve efficiency, productivity, and sustainability.

Fig.3.2.13 NPK sensor

Soil NPK Sensor

Communication Mode	RS-485
Working Voltage	5V DC (special customization)
Detection Range of Soil NPK	0-1999 mg/kg
Detection Accuracy of Soil NPK	±2% F.s
Detection Resolution of Soil NPK	1mg/kg (mg/L)
Storage Environment	-20°C-60°C
Working Pressure Range	0.9 - 1.1 atm
Response Time	<1S
IP Rating	IP68
Installation	Fully embedded or probe fully inserted into the measured medium

Fig.3.2.14 Specifications of NPK sensor

Frequency

Frequency Range	863MHz-928MHz 470MHz-510MHz
Power Output	US915 20dbm; AS923 16dbm; AU915 20dbm; CN470 19.15dbm; EU868 16dbm; KR920 14dbm; IN865 20dbm;
Receiving Sensitivity	-136 dBm (LoRa, Spreading Factor=12, Bit Rate = 293bps) -121 dBm (FSK, Frequency deviation=5kHz, Bit Rate=1.2kbps)
Antenna Type	Built-in antenna
Communication Distance	Up to 10 km (visible linear obstacle-free transmission distance, actual transmission distance depends on the environment.)
Data Transfer Rate	0.3 kbps to 50 kbps (LoRaWan) 1.2 kbps to 300 kbps (FSK)
Modulation System Mode	LoRa/FSK (choose one of them)
Supportable LoraWAN Band	EU863-870,US902-928,AU915-928,KR920-923,AS923-1, AS923-2,AS923-3,IN865-867,CN470-510 (Note: optional, to be done in the factory configuration)

Physical

Size	Main Body: 117 mm x 89.05 mm x 82 mm NPK Sensor: 137mm x 45mm x 15mm
Sensor Wiring	1.25m
Ambient Temperature Range	-20°C ~ 55 °C
Ambient Humidity Range	<90% RH (no condensation)
Storage Temperature Range	-40 °C ~ 85 °C

Fig.3.2.15 Data Sheet of NPK sensor

9. DHT11 Sensor:

DHT11 is a popular digital humidity and temperature sensor used in embedded systems for crop protection. With its compact design and low cost, the DHT11 is an ideal choice for monitoring environmental conditions in agricultural settings. This sensor can measure temperature in the range of 0-50°C with an accuracy of ±2°C and humidity in the range of 20-80% RH with an accuracy of ±5% RH. These measurements can be used to monitor the temperature and humidity levels inside a greenhouse or any other crop protection system. In crop protection systems, the

DHT11 sensor can be integrated with other sensors and actuators to create a closed-loop control system. This system can monitor the environmental conditions in real time and adjust the conditions to ensure optimal crop growth. By integrating this sensor with other hardware and software components, farmers can create intelligent systems that optimize crop growth and yield, while minimizing resource waste and energy consumption.

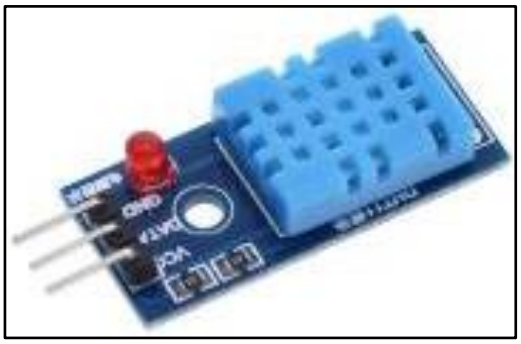

Fig.3.2.16 DHT11 Sensor

DHT11 Specifications

- Operating Voltage: 3.5V to 5.5V
- Operating current: 0.3mA (measuring) 60uA (standby)
- Output: Serial data
- Temperature Range: 0°C to 50°C
- Humidity Range: 20% to 90%
- Resolution: Temperature and Humidity both are 16-bit
- Accuracy: ±1°C and ±1%

Pin Description

1. VDD supply 3.3 ~ 5.5V DC
2. DATA serial data, single-bus
3. NC
4. GND grounding, power negative

Parameters

- Relative Humidity
- Resolution：16Bit
- Repeatability：±1%RH
- Accuracy：25℃ ±5%RH
- Interchangeability Fully interchangeable
- Response time：1/e (63%)25℃ 6s 1m/s Air 6s
- Hysteresis：<±0.3%RH
- Long-term stability：<±0.5%RH/yr

Temperature

- Resolution：16Bit
- Repeatability：±1℃
- Accuracy：25℃ ±2℃
- Response time：1/e (63%) 10S

Electrical Characteristics

- Power supply： DC 3.3～5.5V
- Supply current： Measure 0.3mA Standby 60μA
- Sampling period： Secondary Greater than 2 seconds

10. RS485 Modbus Module

An RS485 output module is a commonly used communication module in embedded systems. It is particularly useful in crop protection systems where remote control of sensors, irrigation systems, and other equipment is required. This module enables multiple devices to communicate with each other over a long distance, up to 1200 meters, with a reliable and noise-resistant signal. This makes it ideal for outdoor applications where long cables are required.

In a crop protection system, the RS485 output module can be used to control the flow of water to crops and manage the temperature, humidity, and other environmental factors. It can also be used to monitor the health of plants by collecting data from sensors and transmitting it to a central controller. This helps farmers make informed decisions about irrigation and fertilization, which can lead to increased crop yields and reduced water usage.

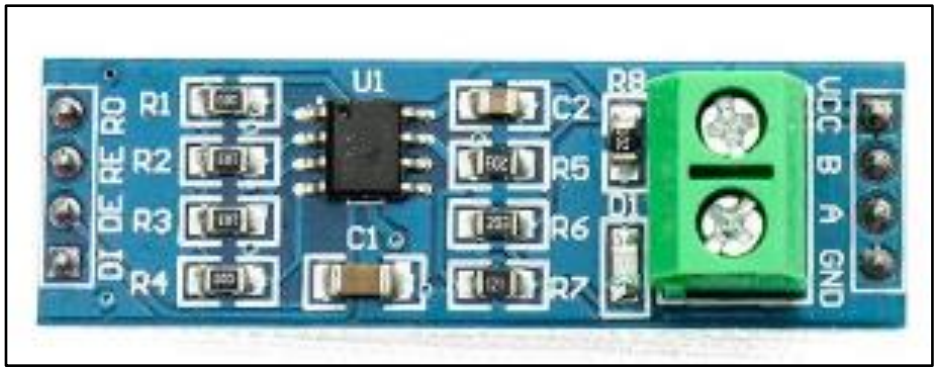

Fig.3.2.16 RS485 Modbus Module

Hardware & System

Specification	Description
Unique Features	Works with any Modbus RS485 master device No software configuration required Single point power termination
Maximum Network Capacity*	Max capacity depends on I/O combination. Power Budget Calculator http://psft.com/A7T
I/O Module Slave ID Selection	16-Position rotary switch (+1 for Modbus slave ID)
DIN Rail Mounting Compatibility	35 mm x 7.5 mm DIN rail
DataRail™ (Included w/ Kit)	6.1 in / 156 mm - Supports up to Exp. +5x I/O modules. Other lengths also available.
Auto-Detection of Modules	Yes, via DataRail at power-up
DataRail Mounting Hardware	4-Claw attachment to 35 mm DIN rail with end terminal bracket
Built-In Mounting Hardware	Spring-loaded clip-on system
Wire Gauge	Solid / stranded (AWG) 28-12 gauge
Wire Rating	UL: 300 V RMS, 80 °C and 300 V, 105 °C CSA: 300 V RMS, 105 °C
Warranty	2-Year limited

*When using more than a 5-Module Combination per system, use the Power Budget Calculator to determine maximum I/O Module capacity.

Fig.3.2.17 Hardware of Modbus RS485

Modbus RS485 Module

Specification	Description
Baud Rate	9600 bits per second
Data Bits	8
Parity / Stop Bits	None / 1
Modbus Slave Addressing	Supports up to 16 addresses / I/O devices*
Red LED (Left)	Power
Green LED (Right)	USB-ready (For firmware update)
Supply Voltage Range	9 to 30 VDC (± 5%)
Reverse Polarity Protection	Yes
Power Consumption	Typical: 20 mA / Max: 24 mA @12 VDC
Packaging Dimensions (WxHxD)	5.5 x 10.1 x 2.8 in / 140 x 257 x 72 mm
Net Dimensions (WxHxD)	0.7 x 3.9 x 4.5 in / 17.5 x 99 x 114 mm
Packaging Weight	0.8 lbs / 363 g
Net Weight	0.3 lbs / 136 g

Fig:3.2.18: Specifications Modbus RS485

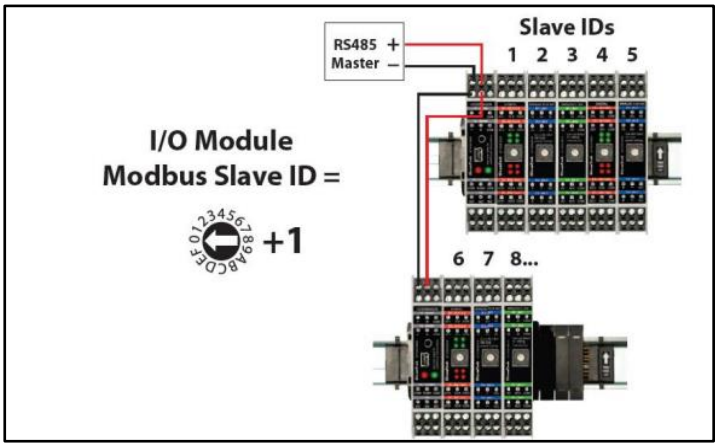

Fig:3.2.19: Modbus Module

Safety & Compliance

Specification	Description
Operational Temperature	-40 °C to 80 °C / -40 °F to 176 °F
Storage Temperature	-20 °C to 85 °C / -4 °F to 185 °F
Humidity	0 to 99 %, Non-condensing
Degree of Protection / Housing	IP20 / Plastic
Hazardous Locations	Class I; Division 2 (Zone 2)

Fig:3.2.20: Safety measures for Modbus Module

3.3 SYSTEM USE CASE

The crop protection system project using Arduino is designed to help farmers monitor and control various environmental factors that affect the growth of crops. The system is equipped with various sensors such as NPK, soil moisture, DHT11, ultrasonic, PIR, GSM module, and smoke sensors to detect changes in the crop's environment. The NPK sensor helps to measure the nutrient levels in the soil, while the soil moisture sensor measures the water content in the soil. The DHT11 sensor monitors the temperature and humidity levels, while the ultrasonic sensor detects the height of the crop. The PIR sensor detects any movement in the field, and the smoke sensor detects any fire outbreak. The system sends alerts to the farmer's phone through the GSM module, enabling the farmer to take appropriate actions to protect the crops. The test case for the system was done in the Tinker cad software for embedded systems, which allowed for a simulated test environment.

CHAPTER 4
DESCRIPTION OF PROPOSED SYSTEM

4.1 AIM

Farmers must perform certain essential tasks for successful cultivation, but some other tasks are out of their control. However, animals such as buffalos, cows, and other animals from forested areas may enter fields and cause significant damage by destroying them. If the crop is afflicted by insects or other illnesses, we have a remedy. There is no remedy for an assault by this kind of animal. This mechanism, which prevents animals from entering the field, is suggested as a solution to this issue. This technique will aid the farmer in preventing animal attacks in places where he or she is unable to continuously tend to the land in order to produce a healthy output. Besides buzzing and blinking LED lights simultaneously while delivering an Alert to the owner quickly after the species is detected, this gadget will frighten animals that invade the field. Also, intrusions coming from above the field in the air can also be sensed through the sensors used and the crop can be protected not only from the four sides but also from the upper air arcs.

4.2 EXISTING SYSTEMS AND THEIR METHODOLOGIES

The crops have not been completely protected by the currently used procedures. These security applications are employed in several locations, including guarding banks and other key locations. The associated load (LED, piezo buzzer, etc.) may be activated by the detection system to warn you when it detects motion, such as that caused by animals. The present system's primary objective is surveillance. Moreover, there is no assurance that these systems will serve as a boundary between the crop and wildlife, even in these application areas. Different actions should be implemented to keep animals from entering the region depending on the threat level posed by the animal violating the farmland, according to the threat level that has to be considered by the current systems.

Although there are several crop monitoring systems, they seldom aid in intrusion detection. Electric fences lack a mechanism for quickly notifying users when breaches occur, and finding flaws is laborious and difficult. Electric fence is an expensive investment that requires laborious upkeep. As a result, these physical restrictions may often injure the animals and occasionally result in casualties. Therefore, the project aims to overcome these constraints. In addition, we are utilizing smoke detection, soil nutrition measuring sensor, and soil moisture sensor to make this a fully comprehensive system for the agricultural sector.

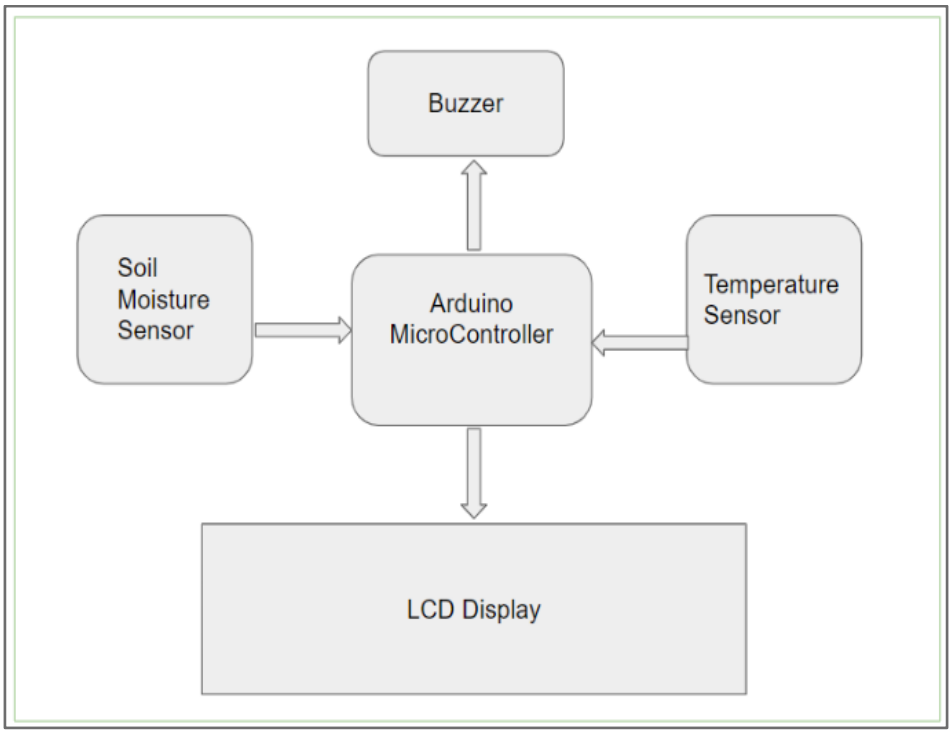

Fig:4.2.1: Flow chart of Existing Methodology

Sensor-based crop protection: This methodology involves the use of various sensors, such as temperature, humidity, and soil moisture sensors, to monitor the conditions of the crops. The data collected from these sensors is then used to control various crop protection mechanisms, such as irrigation, pesticide application, and ventilation.Computer vision-based crop protection: This methodology involves the use of cameras and computer vision algorithms to identify and analyze the health and growth of crops. The data collected from the cameras is then used to control various crop protection mechanisms, such as automated watering and nutrient distribution.

Internet of Things (IoT)-based crop protection: This methodology involves the use of IoT devices, such as sensors and actuators, to monitor and control the environment of the crops. The data collected from these devices is then sent to a cloud-based platform, where it is analyzed and used to make decisions about crop protection measures.

Machine learning-based crop protection: This methodology involves the use of machine learning algorithms to analyze data collected from various sources, such as sensors and cameras, to predict the health and growth of the crops. The data collected is then used to control various crop protection mechanisms, such as irrigation and fertilization.

4.3 SELECTED METHODOLOGY OR PROCESS MODEL

4.3.1 Proposed Methodology Includes

- Decision-making: Based on the data collected by the sensors, the system should be able to make decisions regarding the appropriate action to be taken.
- Actuation: The system should be able to actuate various components such as pumps, Buzzers, and water, or other substances as required
- Communication: The system should be able to communicate with other devices to provide real-time updates and alerts.
- User interface: The system should have a user-friendly interface that allows farmers to easily access and control the system. This can be achieved through communication
- Power management: The system should be designed to operate on low power.
- Security: The system should be designed to be secure and protect against unauthorized access and tampering
- Scalability: The system should be designed to be scalable and be able to handle multiple sensors functioning. This can be achieved using a modular design and good connectivity.

4.3.2 Advantages of The Proposed Methodology

- Real-time monitoring: The smart crop protection system using embedded systems provides real-time monitoring of crops, enabling farmers to quickly detect any issues and take appropriate action.
- Reduced labor costs: The embedded system can automate tasks such as watering and fertilization, reducing the need for labor and thereby lowering costs.
- Improved crop yields: The system can optimize crop growth conditions, leading to improved crop yields and higher profits for farmers.
- Environmentally friendly: The system can reduce the amount of water and chemicals used in crop production, leading to a more environmentally friendly farming process.
- Increased efficiency: The embedded system can streamline tasks such as irrigation and pest control, resulting in a more efficient farming process.
- Lower risk of crop failure: The smart crop protection system using embedded systems can detect potential issues such as pests or diseases at an early stage, reducing the risk of crop failure.
- Customizable: The embedded system can be customized to suit the specific needs of individual crops and farming practices.
- Cost-effective: The smart crop protection system using embedded systems can be cost-effective, as it can be tailored to the needs of individual farmers and does not require expensive hardware or software.
- Easy to use: The system is designed to be user-friendly and easy to operate, making it accessible to farmers of all skill levels.
- Data-driven decision making: The system can collect data on crop growth and conditions, enabling farmers to make data-driven decisions about crop management

4.3.3 Comparison between Existing and proposed Methodology

Existing methodology

- Uses traditional methods of crop protection such as pesticides and herbicides.
- Does not utilize real-time data to monitor and prevent crop damage.
- Does not take into account environmental factors that affect crop health.
- Requires manual intervention and monitoring.

Proposed methodology

- Uses embedded systems to collect real-time data on environmental conditions, such as temperature, humidity, NPK values, and soil moisture.
- Can trigger automatic responses to prevent crop damage, such as adjusting irrigation levels or applying targeted pesticides applications.
- Reduces the need for manual intervention and monitoring.
- Can be integrated with existing farm management systems for seamless operation.

4.3.3 Parameters of The Proposed Methodology

- Soil Moisture: The system should be able to measure soil moisture levels in real-time using embedded sensors. This will help farmers to determine the optimal time to irrigate their crops and prevent over-watering.
- Temperature and Humidity: The system should be able to measure the temperature and humidity levels of the environment. This information will help farmers to identify the ideal growing conditions for their.
- Automated Irrigation: The system should be able to automatically irrigate the crops based on soil moisture levels. This will help farmers to conserve water and prevent over-watering.
- Remote Monitoring and Control: The system should be able to provide farmers with remote access to real-time data and control over the system. This will help farmers to monitor their crops from anywhere and take timely action to prevent crop damage.
- NPK Values: The NPK values of soil, which represent the soil's nutrient content, are crucial for crop growth and health. The smart crop protection

system will include sensors to measure the NPK values of soil and use this data to optimize fertilizer application and irrigation schedules.

- Smoke Detection: Smoke can be an indicator of a potential fire, which can pose a significant risk to crops. The smart crop protection system will include smoke detection sensors to detect smoke and trigger an alarm, alerting farmers to potential fires.
- Intrusion Detection: Protecting crops from theft and vandalism is essential. The smart crop protection system will include intrusion detection sensors that detect any unauthorized entry into the crop fields and send alerts to the farmers and security personnel.
- Real-time Monitoring: The smart crop protection system will provide real-time monitoring of the crop fields, allowing farmers to track the status of their crops and respond quickly to any issues or emergencies

4.4 ARCHITECTURE / OVERALL DESIGN OF PROPOSED SYSTEM

The connections planned to be created are represented in the block diagram below.

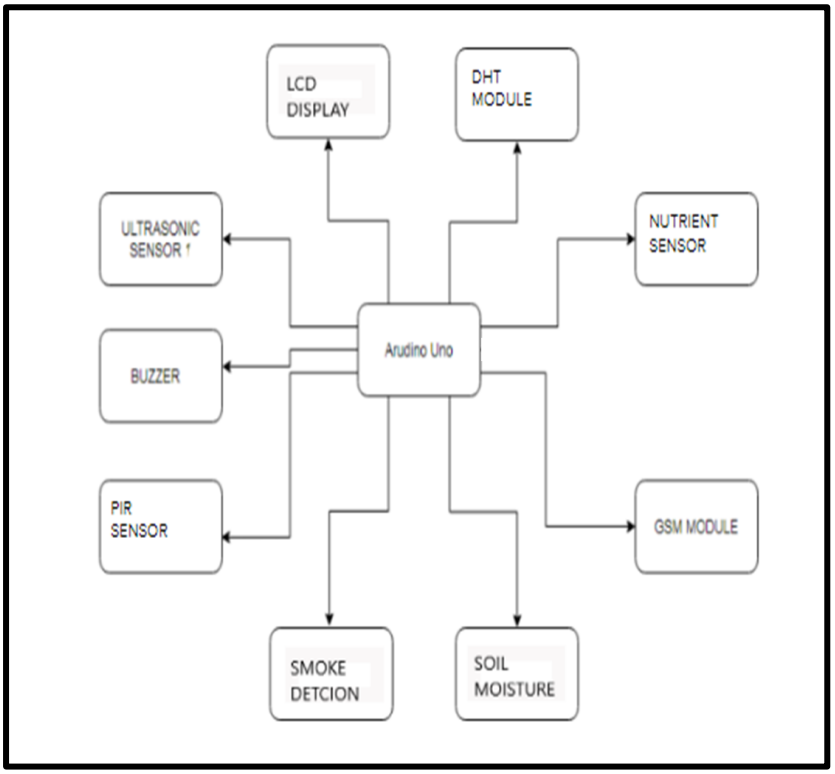

Fig:4.3.1: Block diagram of the Proposed Methodology

The block diagram for the proposed architecture of the crop protection system using Arduino GSM interfaced with NPK, soil moisture, DHT11, smoke, PIR, and ultrasonic sensors is composed of several components. At the center of the system is the Arduino GSM module, which acts as the brain of the system. The NPK sensor measures the nitrogen, phosphorus, and potassium levels in the soil, while the soil moisture sensor monitors the moisture content in the soil. The DHT11 sensor measures temperature and humidity levels in the environment. The smoke sensor detects smoke particles, while the PIR sensor detects human or animal presence in the vicinity. The ultrasonic sensor measures the distance between the plant and the ground. All these sensors are interfaced with the Arduino GSM module, which sends the data to the cloud or to the farmer's mobile phone via GSM technology. The farmer can then use the data to make informed decisions about crop protection and management.

4.5 DESCRIPTION OF SOFTWARE FOR IMPLEMENTATION AND TESTING PLAN OF THE PROPOSED MODEL/SYSTEM

We tested the idea of the model in tinker cad software. We tried to write the code and connect the available components in the available resource.

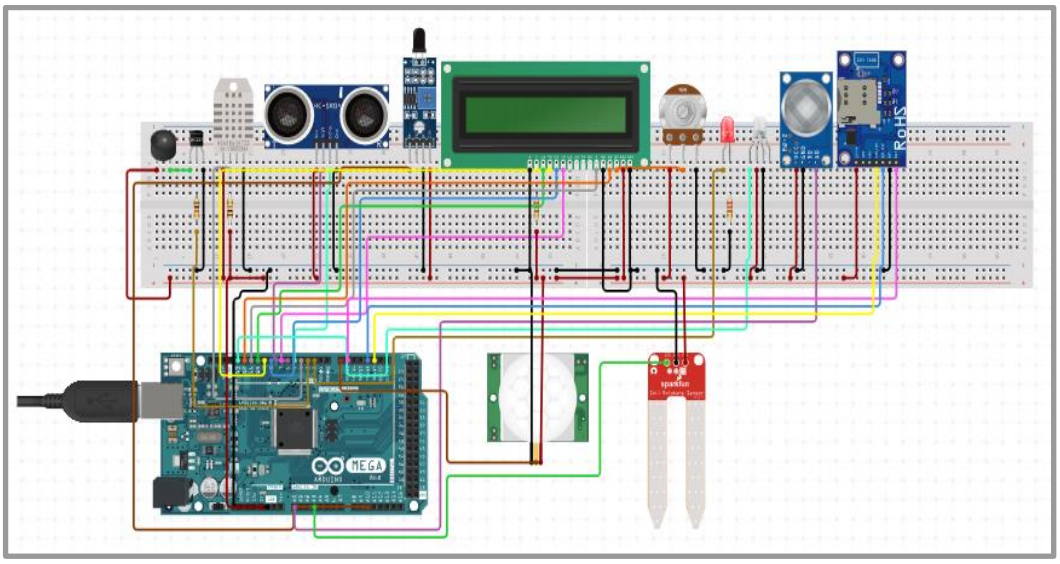

Fig.4.3.2 Overall design of proposed methodology

4.6 PROJECT MANAGEMENT PLAN

The management plan for the project on crop protection system using NPK sensor and other sensors should include various components to ensure its successful implementation. First, a project team should be established, with defined roles and responsibilities, and a project timeline should be created to provide a roadmap for the project. Secondly, a budget should be created that outlines the costs associated with the project, including the costs of purchasing sensors, equipment, and software, as well as the costs of labor and training. Thirdly, a risk management plan should be developed to identify potential risks to the project and mitigate them. Fourthly, communication and reporting procedures should be established to ensure that the project team stays informed and up-to-date on project progress

4.7 FINANCIAL REPORT ON ESTIMATED COSTING

Table 4.1 Costs of the Components

S. No.	Name of the Component	Cost
1.	Arduino Uno Board	Rs. 1700
2.	Power supply Adapter	Rs. 300
3.	I2C LCD Display 16x2	Rs. 245
4.	RS485 Output	Rs. 200
5.	Ultrasonic Sensor	Rs. 300
6.	DHT11 Sensor	Rs. 210
7.	NPK Sensor	Rs. 8000
8.	Soil Moisture Sensor	Rs. 150
9.	Smoke Sensor	Rs. 200
10.	GSM Module	Rs. 750

The Crop protection system using Arduino is an innovative project that aims to protect crops from various environmental factors such as pests, diseases, and adverse weather conditions. The project requires a significant amount of investment in terms of both time and money.

The cost of building this project is a crucial factor, and it's worth nothing that the best possible amount spent on this project is 12,055/-. This cost is relatively low when compared to existing projects.

The low cost can be attributed to the efficient use of resources and the implementation of cost-saving measures during the project's development. Despite the low cost, the project's quality and effectiveness are not compromised, and it's expected to deliver outstanding results in crop protection. In conclusion, the Crop protection system using Arduino is an innovative and cost-effective project that has the potential to revolutionize the agriculture industry by providing sustainable and efficient crop protection solutions.

4.8 TRANSITION/ SOFTWARE TO OPERATIONS PLAN

- Identify key stakeholders: Determine the stakeholders who will be involved in the transition and operations of the system. These could include farmers, agricultural advisors, hardware and software vendors, and other key players in the agricultural industry.
- Develop a deployment plan: Determine how the system will be deployed to the field, including installation and training of end-users.
- Consider maintenance and support: Establish procedures for system maintenance and support, including troubleshooting and replacement of hardware and software components.
- Develop a data management plan: Determine how data will be collected, managed, and shared among stakeholders. This may involve integrating the system with existing farm management software or other tools.
- Monitor system performance: Continuously monitor system performance and collect data to identify areas for improvement and optimization. This will ensure that the system remains effective and efficient in its operation over time.

CHAPTER 5
IMPLEMENTATION DETAILS

5.1 DEVELOPMENT AND DEPLOYMENT SETUP

Developing and deploying a smart crop protection system using embedded systems involves a variety of steps and considerations. Firstly, the hardware and software components of the system must be selected and integrated to ensure proper functionality. This may include sensors to detect environmental conditions and pests, microcontrollers to process data and control actuators, and communication modules to transmit data to a central monitoring system. Next, the system must be programmed and tested to ensure reliable and accurate performance. Once the system is operational, deployment considerations must be taken into account, including power supply, connectivity, and physical placement of the components within the crop field. Ongoing monitoring and maintenance may also be necessary to ensure the continued functionality of the system. Ultimately, a well-designed and properly deployed smart crop protection system can greatly enhance the efficiency and effectiveness of agricultural operations.

5.2 ALGORITHMS AND FLOWCHARTS

The flow chart of the smart crop protection system with Arduino interface involves several key components, including sensors for NPK, soil moisture, smoke, PIR, DHT11, and ultrasonic sensors, all connected to a GSM module. The system is designed to continuously monitor the crop environment, collect sensor data, and transmit that data to the owner's phone via the GSM module. The NPK sensor measures the levels of nitrogen, phosphorus, and potassium in the soil. The soil moisture sensor measures the amount of moisture present in the soil, while the DHT11 sensor measures the temperature and humidity of the crop environment. The PIR sensor detects motion, while the smoke sensor detects the presence of smoke. The ultrasonic sensor measures the distance between the sensor and the crop.

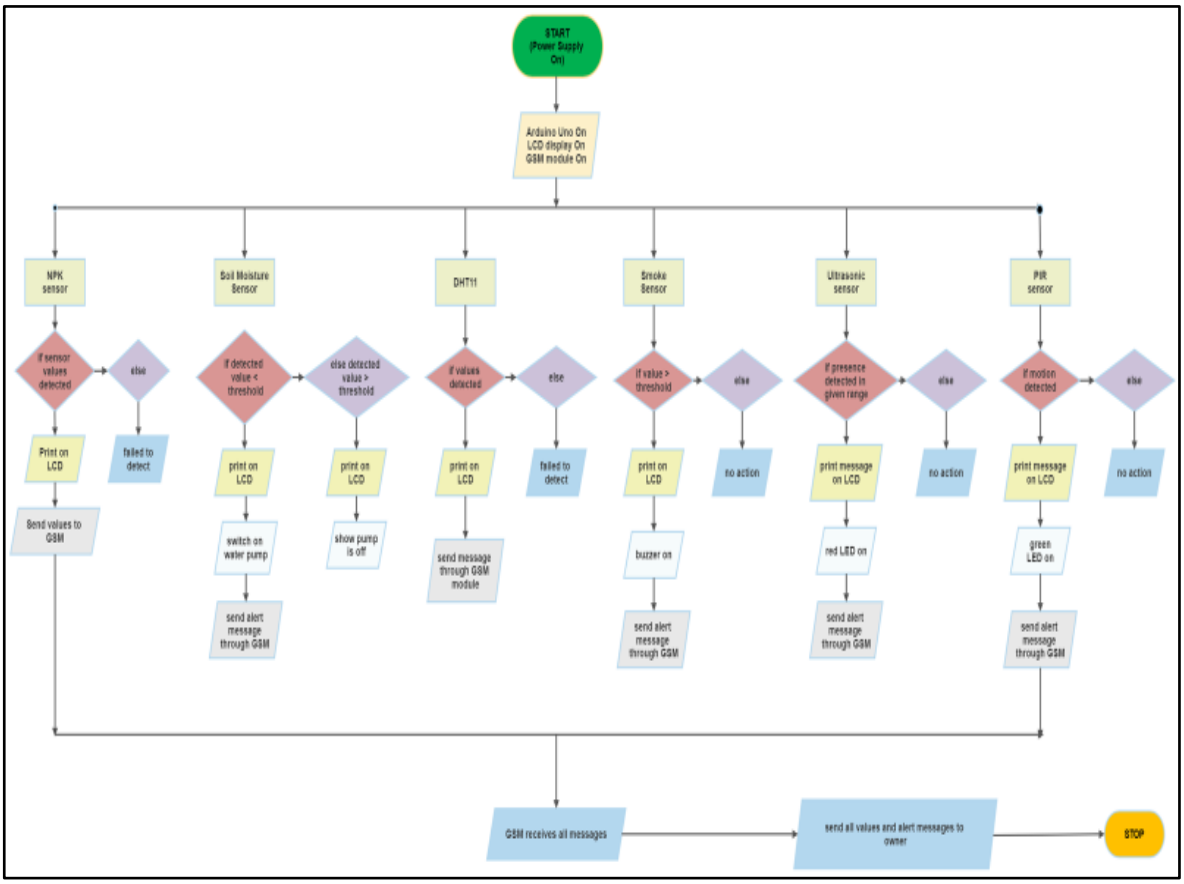

Fig.5.2.1. Flow chart of Proposed Methodology

Once the sensor data is collected, the Arduino interface analyzes the data and determines whether any action is necessary. If any of the sensors detect abnormal conditions such as low soil moisture, high temperature or humidity, presence of smoke or motion, the system sends alert messages to the owner's phone via the GSM module. The alert messages inform the owner of the specific issue that has been detected so that they can take appropriate action.

The flow chart of the smart crop protection system with Arduino interface provides a clear understanding of how the system works to monitor the crop environment, collect sensor data, and transmit that data to the owner's phone. This system helps farmers to identify potential problems early on, allowing them to take corrective action before significant damage occurs. By automating the process of monitoring and alerting, the smart crop protection system ensures the efficient management of crops and maximizes yield.

5.3 TESTING

The sensors namely the Gas sensor, moisture sensor, ultrasonic sensor, PIR sensor, NPK sensor, ultrasonic sensor, and DHT11 sensor are all connected to the Arduino UNO board as shown in the simulation circuit which was done in the online Tinker cad simulation software. It is shown below, we have given the connections of the sensors along with the alarming tools such as a buzzer connected to the gas sensor which will be ON when there is any kind of fire accident detected by the gas sensor. Similarly, the soil moisture is connected to the water motor so whenever the soil moisture is less than the threshold value it would switch on the water pump motor. Also, whenever the PIR sensor senses the motion, it glows the led, warning us about the intrusion into the field. Lastly, the ultrasonic sensor is connected to the led which represents the lights glowing whenever we enter the field.

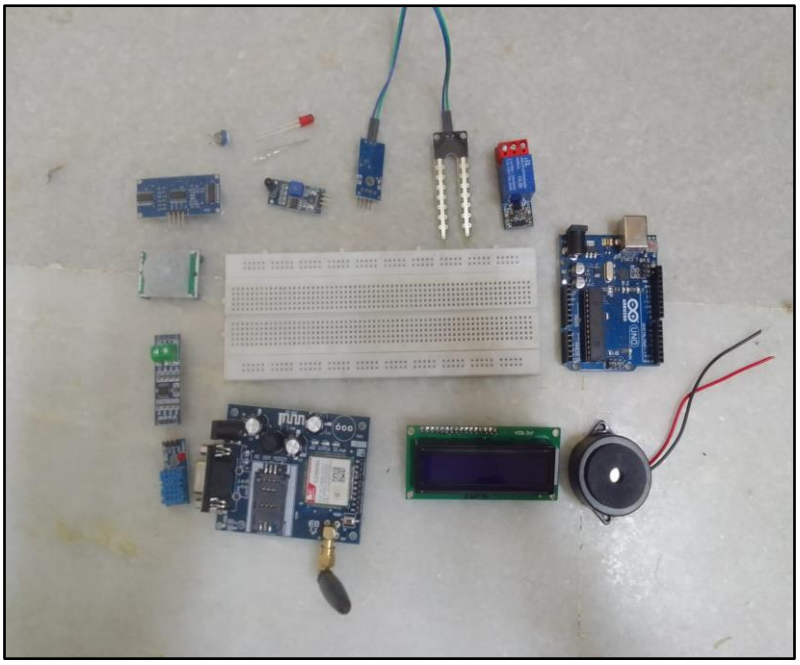

Fig.5.3.1. Components

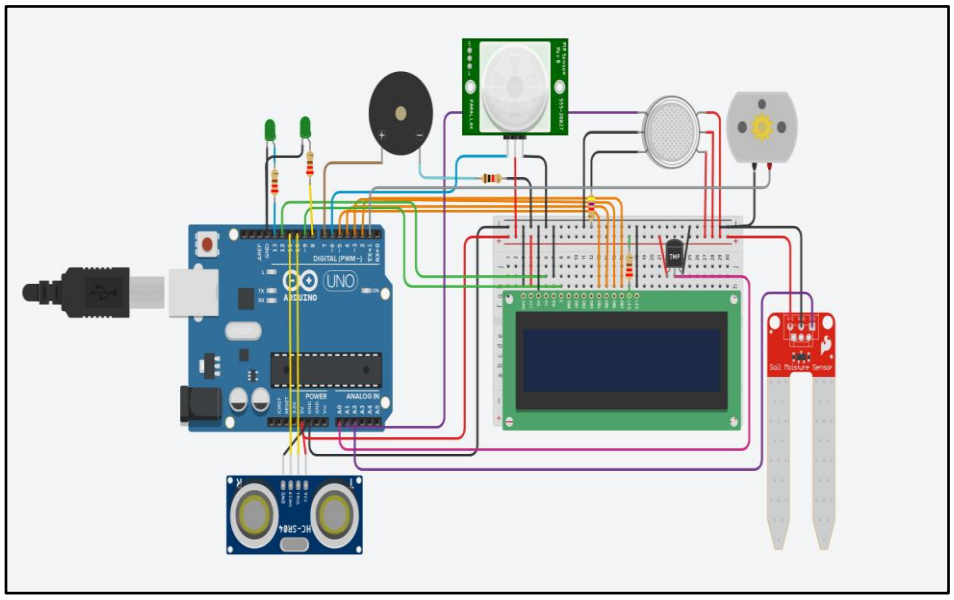

Fig.5.3.2. Connectivity simulation circuit

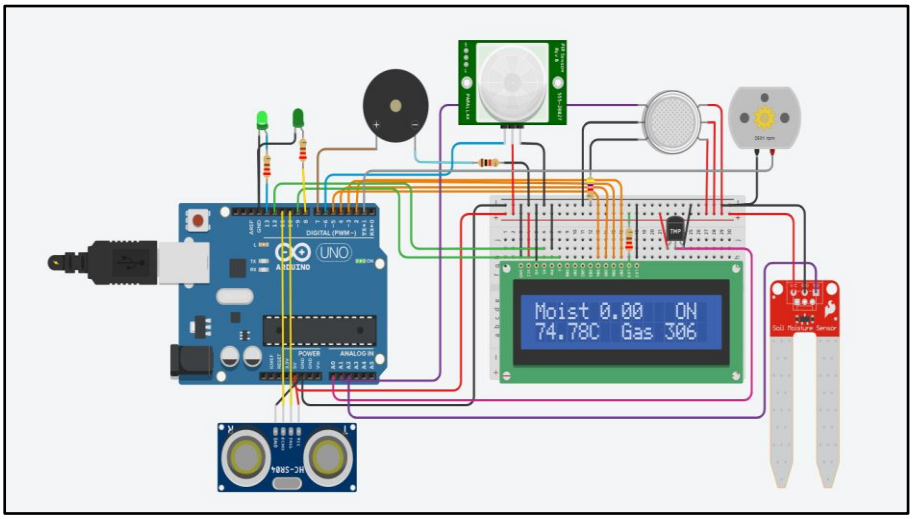

Fig.5.3.3. Working simulated circuit

Implementing and testing the crop protection circuit using Tinker cad involves integrating multiple sensors and interfacing them with an Arduino board. The circuit comprises sensors such as ultrasonic, PIR, smoke, temperature, humidity, soil moisture, and NPK. These sensors work together to detect various environmental conditions that could affect crop growth and health. The Arduino board processes the sensor data and generates output signals to control the LED and buzzer alert systems.

CHAPTER 6

RESULTS AND DISCUSSIONS

Interfacing various sensors with an Arduino Uno R3 and displaying their readings on an I2C LCD 16*2 is the first step towards building a smart crop protection system using embedded systems. NPK sensor, RS485 Modbus module, soil moisture sensor, smoke sensor, DHT11 sensor, ultrasonic sensor, and PIR sensor are some of the sensors that can be interfaced with an Arduino Uno R3. Each sensor has a specific purpose, and together they can provide valuable information about the crop's health and growth. The NPK sensor can measure the concentration of nitrogen, phosphorus, and potassium in the soil. The RS485 Modbus module can be used to communicate with the sensor and read the data. The soil moisture sensor can be used to measure the moisture content in the soil. The smoke sensor can detect smoke in the surrounding area and raise an alarm in case of a fire outbreak. The DHT11 sensor can measure temperature and humidity. The ultrasonic sensor can be used to measure the distance between the sensor and an object, which can be used to determine the crop's height. The PIR sensor can detect the presence of people or animals in the area.

The readings from each sensor can be displayed on an I2C LCD 16*2, making it easy to monitor the crop's health and growth. Additionally, the data from each sensor can be sent to the owner's mobile phone using a GSM SIM800A module. The module can be used to send SMS messages containing the sensor readings, which can help the owner take timely action to protect the crop from damage

When the power is turned on, the LCD display lights up and immediately shows the message "Setup on," indicating that the system is operational and ready to use. This display is likely to be a central hub for monitoring and controlling the various sensors, allowing users to quickly and easily make adjustments or receive alerts if any issues arise.

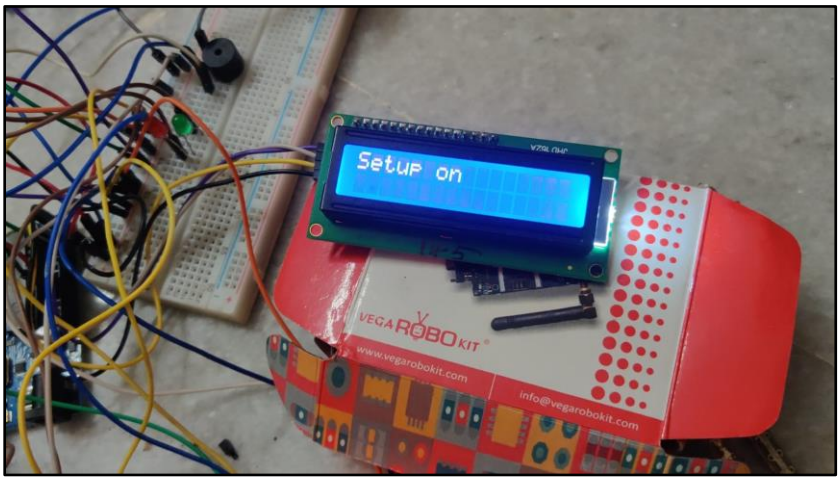

Fig.6.1. Set Up On Display

The process begins by collecting data from the DHT11 sensors, which are capable of measuring both temperature and humidity levels. The collected data is then transmitted to a microcontroller, which processes the information and sends it to an LCD screen for display. The LCD screen shows the temperature and humidity values from the DHT11 sensors in a clear and easily readable format. This allows users to monitor the conditions in a given environment or location.

After a predetermined delay, the screen automatically switches to display the values of the next set of sensors. This could include sensors measuring variables such as light levels, pressure, or motion, depending on the specific application. By cycling through the readings from multiple sensors in this way, users can gain a more comprehensive understanding of the conditions in a given space.

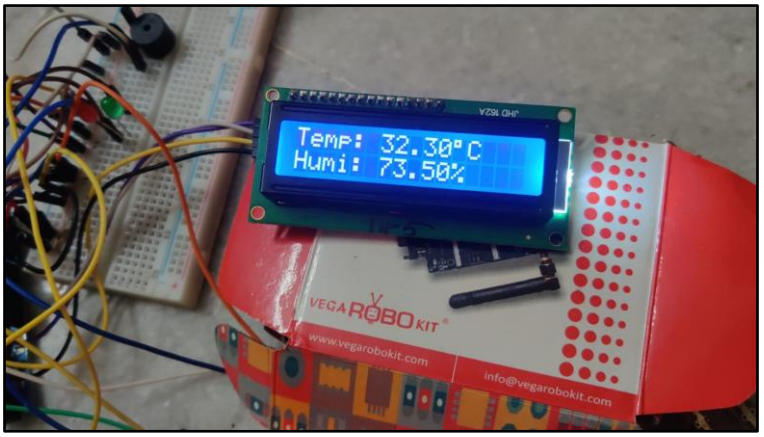

Fig.6.2. Temperature and Humidity display

The next process begins by reading the value of the moisture sensors. These sensors measure the level of moisture in the environment and provide a numerical value as output. Once this value is obtained, it is compared to a predetermined threshold value that has been set by the system. If the moisture level is found to be below the threshold value, it indicates that the environment is too dry and requires watering. In this case, the system activates a motor that is responsible for irrigating the area. The motor is turned on and water is supplied to the plants or soil, which increases the moisture level.

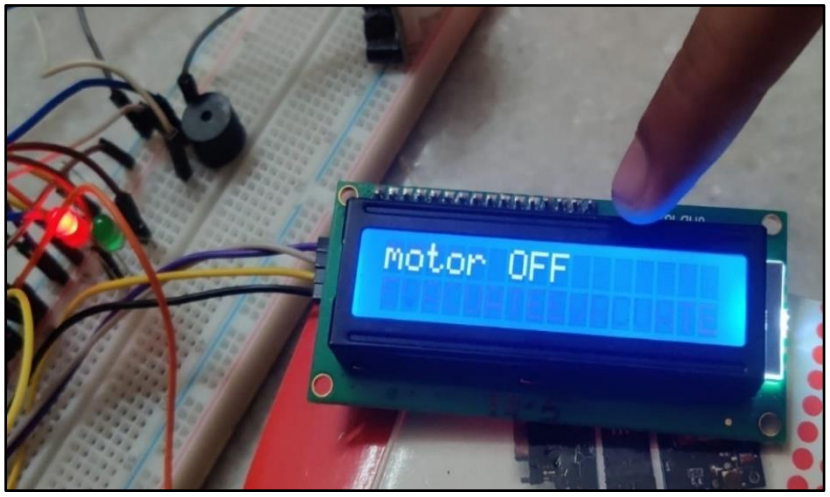

Fig.6.3. The motor is off when moisture in the soil increases

On the other hand, if the moisture level is above the threshold value, it indicates that the environment is sufficiently moist and does not require any more watering. In this scenario, the system switches off the motor to prevent over-watering. To make this process more user-friendly and informative, the system displays the status of the motor on an LCD screen. This allows the user to monitor the environment and take any necessary actions based on the displayed Information. Then the smoke sensor values are determined after a specified delay if there is any smoke detected then automatically a buzzer switches on in the field and the message “EVACUATE” is displayed on the LCD screen.

Fig.6.4 smoke detected evacuate alert message

The system is equipped with various sensors that collect data on different parameters such as npk (nitrogen, phosphorus, and potassium) levels, soil moisture, and smoke. To provide the user with real-time updates on the values recorded by these sensors, the data is displayed on the serial monitor. This enables the user to monitor the changes in the sensor values and take appropriate actions based on the information presented. The display on the serial monitor is shown in the figure, which illustrates the current values of npk, soil moisture, and smoke.

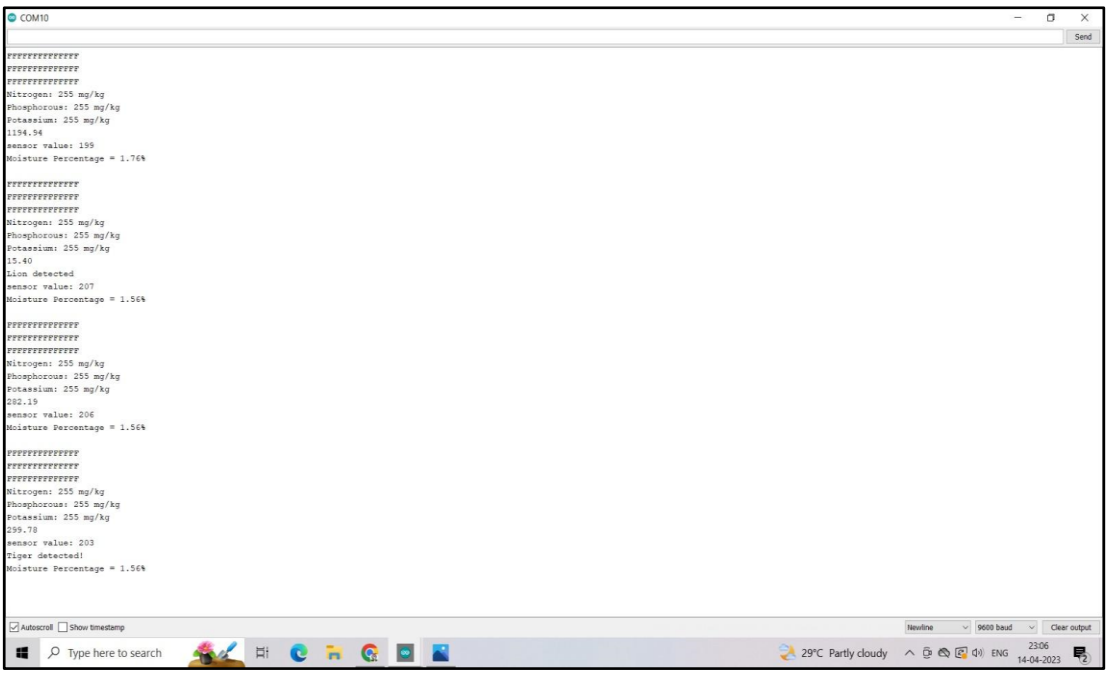

Fig.6.5 Serial monitor display of NPK value from sensor

The Global System for Mobile Communications (GSM) is a wireless communication network used to transmit messages to mobile phones. With GSM, all the messages containing information about the sensor's values and status are sent directly to the owner's mobile phone. In addition to this, if any potential danger is detected by the sensor, such as smoke or intrusion, the system immediately sends an alert message to the owner to notify them about the situation.

This feature ensures that the owner can take necessary precautions and actions to mitigate any potential threats, ensuring safety and security. Overall, GSM plays a crucial role in ensuring efficient and reliable communication between the sensor and the owner in real-time

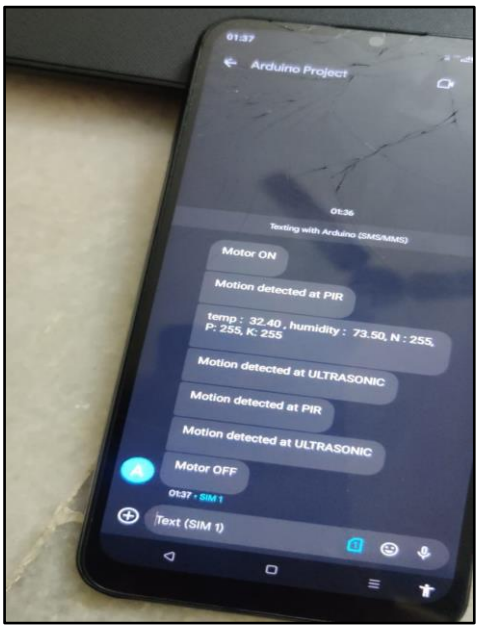

Fig 6.6 Alert message to user's mobile using GSM

The project setup, which includes both the sensors and displays, has been designed and assembled as depicted in the figure. All the necessary components have been arranged and connected according to the specifications, resulting in a functional system ready for use. The figure serves as a visual representation of the setup and can be used as a reference for anyone using or replicating the project.

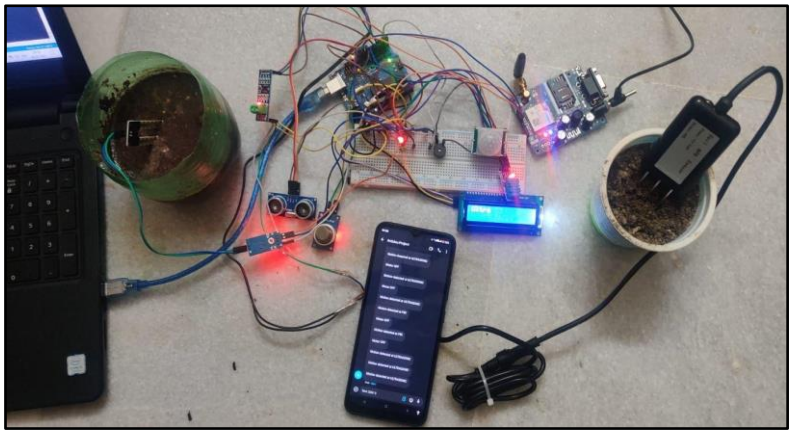

Fig 6.7 Complete project setup

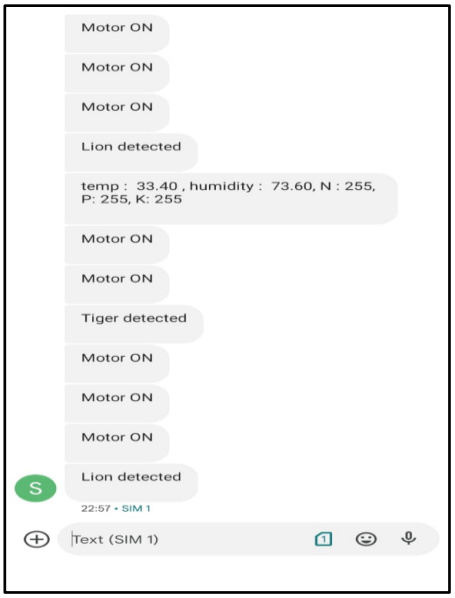

Fig.6.8 The messages sent to the owner's mobile through the GSM

In a scenario where an Arduino interface is used to receive information from sensors and detect the state of the water pump, intrusion, and animal alerts, the GSM module can be used to relay this information to the owner's mobile device. The Arduino can be programmed to communicate with various sensors, collect data, and analyze the sensor data to determine the state of the water pump, intrusion, and animal alerts. Once this information is processed, it can be transmitted via the GSM module to the owner's mobile device. With this system in place, the owner can stay informed about the state of their property and take the necessary steps to address any problems that may arise.

CHAPTER 7
CONCLUSION

7.1 CONCLUSION

Crop security from animal encroachment is a crucial factor for successful crop growth, especially in rural India where animal hazards pose serious challenges to farmers. With no existing remedy for this problem, there is an urgent need to address this issue, which has enormous societal relevance. While the suggested solution does not entirely resolve the challenges that farmers face, it guarantees that farmers will receive prior warnings of animal attacks and prevent crop loss. Protecting agriculture, as the foundation of the Indian economy, is our responsibility. In addition to crop security, the study also identified a quick and effective method for determining soil moisture content. The irrigation system can detect low soil moisture levels automatically, irrigating the plants accordingly. Through this research, various sensor types, Arduino boards, their uses, and how to operate them have been better understood, highlighting the potential for future agricultural innovations. This project demonstrates a practical application of technology to address real-world agricultural challenges, emphasizing the importance of innovation and adaptation in agricultural objectives.

7.2 FUTURE DEVELOPMENTS

The project crop protection system using Arduino, GSM, NPK sensor, soil moisture sensor, ultrasonic sensor, PIR sensor, and smoke sensor has immense potential for future developments. One of the possible developments is the integration of artificial intelligence (AI) and machine learning algorithms to analyze the data collected by the sensors. Another possible development is the use of blockchain technology to create a decentralized system that allows farmers to share data and insights with each other. Another challenge is ensuring the security and privacy of the data collected by the system. Therefore, future developments must focus on addressing these challenges while enhancing the system's functionality and accessibility.

7.3 RESEARCH ISSUES

During the literature survey for the project on crop protection system using Arduino, GSM, NPK sensor, soil moisture sensor, ultrasonic sensor, PIR sensor, and smoke sensor, there were several research issues that were encountered. One of the main issues was related to the components' specifications and their usage.

Another significant challenge was the availability of the NPK sensor. This sensor is used to measure the nutrient levels in the soil, which is critical for crop growth and protection. However, this sensor was not widely available in the market, and the limited options that were available were expensive. This made it difficult to obtain the necessary equipment for the project and posed a challenge to the overall feasibility of the project.

7.4 IMPLEMENTATION ISSUES

The implementation of a crop protection system using Arduino, GSM, NPK sensor, soil moisture sensor, ultrasonic sensor, PIR sensor, and smoke sensor posed several challenges during the development phase. One of the primary issues encountered was the interfacing of different sensors with Arduino. Since each sensor has a unique interface protocol, it required careful calibration and programming to ensure the sensors work in sync. The complexity of the circuit also added to the difficulties, as errors in wiring could result in incorrect readings or malfunctioning of the system.

In conclusion, implementing a crop protection system using Arduino, GSM, NPK sensor, soil moisture sensor, ultrasonic sensor, PIR sensor, and smoke sensor requires a keen understanding of various programming languages, interface protocols, and circuit design.

REFERENCES

[1] Anubhav Gulati, Sanjeev Thakur “Smart Irrigation Using Internet of Things” 2018 8th International Conference on cloud computing,Data science Engineering

[2] Christian Dimkpa, P.S Bindraban, Joan E Mclean, Lydiah Gatere “Methods for Rapid Testing of Plant and Soil Nutrients”, IEEE 4th International Conference, 2017

[3] Courtney Pariera Dinkins, Clain Jones “Interpretation of Soil Test Reports for Agriculture”, Montana State University, Self-Learning Resources, 2013

[4] Damini Kalra, Praveen Kumar, K. Singh, Apurva Soni “Sensor Based Crop Protection System with IoT monitored Automatic Irrigation” 2nd International conference on Advances in Computing, Communication Control and Networking, 2020.

[5] Dr. A. Cottenie “Soil and Plant Testing as a Basis of Fertilizer Recommendation” FAO Soils Bulletin 38/1, Soil and Plant Testing and Analysis, 1980.

[6] Eka maulana, .Animal presence detection for elephants and extruding method based on bee frequency,IEEE,2018. V. Deshpande, “Design and implementation of an intelligent security system for farm protection from wild animals,” International Journal of Science and Research, ISSN (Online), pp. 2319–7064, 2016.

[7] Kavya monisha.k; aishwtional jourarya.d, International journal of advanced research, ideas and innovations in technology,volume 4, issue 5 ISSN:2454-132,april 2012.

[8] K. Pernapati, "IoT Based Low Cost Smart Irrigation System," 2018 Second International Conference on Inventive Communication and Computational Technologies(ICICCT), Coimbatore, 2018, pp. 1312-1315, doi: 10.1109/ICICCT.2018.8473292.

[9] K. Rao, R. Maikhuri, S. Nautiyal, and K. G. Saxena, “Crop damage and livestock depredation by wildlife: a case study from nanda devi biosphere reserve, india,” Journal of Environmental Management, vol. 66, no. 3, pp. 317– 327, 2002.

[10] Kshama S.Bhise, International Journal of Scientific & Engineering Research, Volume 7, Issue 2, February-2016 ISSN2229-5518.

[11] Madhu.b, smart agriculture: a bliss to farmers, international journal of engineering sciences and research technology, ISSN:2277-9655, APRIL,2017

[12] Mary Pletsch Jones “Evaluating Nutrient Availability in Low Fertility Soils with Resin Capsules and Conventional Soil Tests”, BYU Scholar Archives, All Theses and Dissertations- 3049, 2011.

[13] M. Jaya Prabha, R. ramprabha, V VasuBindhra, C. AshaBeula “Sart Crop Protection System From Animals” International Journal of Engineering and Advanced Technology ISSN: 2249-8958, Vol.:9, Issue: 4 april,2020

[14] Mr. P. Venkatesh Rao, Mr.Ch Siva Rama Krishna, Mr M Samba Siva Reddy “A Smart Crop Protection against Animal Attack”. International Journal of Scientific Research and Review ISSN: 2279 Vol. 8 Issue 05, 2019

[15] Nikesh Gondchawar, IOT based smart agriculture,international journal of advanced research in computer and communication engineering,vol.5,issue 6,june 2016.

[16] P.Munaswamy,Smart agriculture system using iot, international journal of recent technology and engineering ,ISSN:2277-3878,volume 7,issue- 5,Jan 2019.

[17] P Rekha, T. Saranya, P. Preethi, L. Saraswathi, G. Sobhana "Smart Agro Using Arduino and GSM" International Journal of Emerging Technologies in Engineering Research Vol: 5, Issue: 3 March, 2017.

[18] R. Bhardwaj, K. Bera, O. Jadhav, P. Gaikwad, and T. Gupta, “Intrusion detection through image processing and getting notified via sms and image,” 2018

[19] R. Vigneshwar and R. Maheswari, “Development of embedded systems to monitor elephant intrusion in forest border areas using internet of things,” International Journal of Engineering Research, vol. 5, no. 7, pp. 594–598, 2016.

[20] S. Giordano, Ilias Nektarios Seitanidis, Mike Oluwatayo Ojo, Davide Adami “IoT solutions for crop protection against wild animal attacks” 2018 IEEE International Conference on Environmental Engineering (EE), March 2018

[21] Shruti dugga; c.ashwini : Automatic irrigation system using arduino, International research journal of engineering and technology,volume:05,issue: 10,October 2008.

[22] S. Pandey and S. B. Bajracharya, “Crop protection and its effectiveness against wildlife: A case study of two villages of shivapuri national park, nepal,” Nepal Journal of Science and Technology, vol. 16, no. 1, pp. 1– 10, 2015.

[23] Tejas Khare, Anuradha Phadke “Automated Crop Field Surveillance Using Computer Vision” Conference Paper, Dec 2020